FED. ROAD DIST. NO.	STATE	PROJ. NO.	FISCAL YEAR	SHEET NO.	TOTAL SHEETS
HAWAII	HAW.	19HK-01-22M	2022	2	27

INDEX TO STRUCTURAL DRAWINGS

SHEET NO.	DESCRIPTION	SHEET NO.	DESCRIPTION
S0.1	INDEX TO STRUCTURAL DRAWINGS		NANUE STREAM BRIDGE
S0.2	SYMBOLS AND ABBREVIATIONS	SC0.1	NANUE STREAM BRIDGE STRUCTURAL GENERAL NOTES
		SC1.1	NANUE STREAM BRIDGE LAYOUT PLAN
	WAILUKU STREAM BRIDGE	SC1.2	NANUE STREAM BRIDGE ELEVATION
SA0.1	WAILUKU STREAM BRIDGE STRUCTURAL GENERAL NOTES		
		SC2.1	NANUE STREAM BRIDGE SECT. ELEVS. - BENT NOS. 4 AND 5
SA1.1	WAILUKU STREAM BRIDGE LAYOUT PLAN AND ELEVATION	SC2.2	NANUE STREAM BRIDGE SECT. ELEVS. - BENT NOS. 6 AND 7
SA2.1	WAILUKU STREAM BRIDGE ELEVATION	SC3.1	NANUE STREAM BRIDGE DEMOLITION SECTIONS AND DETAILS
SA2.2	WAILUKU STREAM BRIDGE SECTIONS	SC3.2	NANUE STREAM BRIDGE SECTIONS AND DETAILS
SA2.3	WAILUKU STREAM BRIDGE SECTIONS	SC3.3	NANUE STREAM BRIDGE SECTIONS AND DETAILS
		SC3.4	NANUE STREAM BRIDGE SECTIONS AND DETAILS
	HAKALAU STREAM BRIDGE		
SB0.1	HAKALAU STREAM BRIDGE STRUCTURAL GENERAL NOTES		
SB1.1	HAKALAU STREAM BRIDGE LAYOUT PLAN AND ELEVATION		
SB1.2	HAKALAU STREAM BRIDGE LAYOUT PLAN AND ELEVATION		
SB2.1	HAKALAU STREAM BRIDGE SECT. ELEVS. - BENT NOS. 4 AND 5		
SB2.2	HAKALAU STREAM BRIDGE SECT. ELEVS. - BENT NOS. 6 AND 7		
SB3.1	HAKALAU STREAM BRIDGE SECTION AND DETAIL		
SB3.2	HAKALAU STREAM BRIDGE SECTION AND DETAIL		
SB3.3	HAKALAU STREAM BRIDGE SECTION AND DETAIL		
SB3.4	HAKALAU STREAM BRIDGE SECTION AND DETAIL		
SB3.5	HAKALAU STREAM BRIDGE DETAIL		

STEPHEN T. PETERS
LICENSED PROFESSIONAL ENGINEER
NO. 17097-S
HAWAII, U.S.A.

THIS WORK WAS PREPARED BY ME OR UNDER MY SUPERVISION.

SIGNATURE — EXPIRATION DATE OF THE LICENSE

STATE OF HAWAI'I
DEPARTMENT OF TRANSPORTATION
HIGHWAYS DIVISION

INDEX TO STRUCTURAL DRAWINGS

HAWAII BELT ROAD
HAMAKUA COAST BRIDGE REPAIRS
(WAILUKU, HAKALAU AND NANUE STREAM BRIDGES)
Project No. 19HK-01-22M

Scale: None — Date: Sept. 2021

SHEET No. S0.1 OF 2 SHEETS

ORIGINAL PLAN | NOTE BOOK No. | SURVEY PLOTTED BY | DRAWN BY | TRACED BY | DESIGNED BY | QUANTITIES BY | CHECKED BY | DATE

DRAWING NAME: Z:\JOB ONGOING\20-040.8-CRITICAL RPR WAILUKU-HAKALAU-NANUE\01 CAD\09-27-21 REVISED TITLE SHEET\02 HCR-S0001 INDEX.DWG PLOT TIME: 09-27-21, 5:17 PM

FED. ROAD DIST. NO.	STATE	PROJ. NO.	FISCAL YEAR	SHEET NO.	TOTAL SHEETS
HAWAII	HAW.	19HK-01-22M	2022	3	27

SYMBOLS AND ABBREVIATIONS

&	And
@	At
Ø	Diameter
#	Number, Pound
Abut.	Abutment
Abbr.	Abbreviation
Add.	Additional, Added
Alt.	Alternate
AB	Anchor Bolt
AC	Asphaltic Concrete
Approx.	Approximate
Az.	Azimuth
Bk.	Back
Bal.	Balance
℄	Baseline
Bm.	Beam
Brg., Brgs.	Bearing, Bearings
BVC	Beginning of Vertical Curve
BMP	Best Management Practices
Bet.	Between
BF	Both Faces, Back Face
BW	Both Ways
BFE	Bottom of Footing Elevation
Bot., Bott., B	Bottom
Br.	Bridge
Blt.	Bolt
Cant.	Cantilever
C.B.	Catch Basin
CIP	Cast-in-Place
℄	Centerline
CG	Center of Gravity
cgs	Center to Gravity of Strands
cc	Center to Center
Cl.	Class
Clr.	Clearance
Col.	Column
Conc.	Concrete
Conn.	Connection
Const.	Construction
CFCW	Continuous Flashing Compound Waterproofing
CJ	Control Joint
Const. Jt.	Construction Joint
CLSM	Controlled Low Strength Material
Cont.	Continuous
CF	Cubic Feet
CY, Cu. Yd.	Cubic Yard
CSL	Crosshole Sonic Logging
Demo	Demolish, Demolition
Det.	Detail
Diag.	Diagonal
Dia.	Diameter
Dim.	Dimension
Dist.	Distance
DO	Ditto
Dwls.	Dowels
Dn.	Down
Dbl.	Double
DI	Drain Inlet, Ductile Iron
Dwg., Dwgs.	Drawing, Drawings
DS	Drilled Shaft
EA, Ea., ea.	Each
EF	Each Face
EFH	Each Face Horizontal
EFV	Each Face Vertical
EW	Each Way
EP	Edge of Pavement
EPS	Expanded Polystyrene
E	East
Elec.	Electrical
EMH	Electrical Manhole
El., Elev.	Elevation
Emb.	Embankment
Embed.	Embedded, Embedment
EVC	End of Vertical Curve
Eq.	Equal
Est.	Estimated
Exc.	Excavation
Excl.	Excluding
Exist., Ex.	Existing
Exp., (E)	Expansion
EJ	Expansion Joint
Ext.	Exterior
FF	Far Face. Front Face
F'c	Specified Strength of Concrete
F'ci	Strength of Concrete at Time of Initial Prestress
Ft.	Feet, Foot
Fig.	Figure
Fin. Gr.	Finish Grade
(F)	Fixed
FB	Flat Bar
Ftg.	Footing
FA	Force Account
Ga.	Gage, Gauge
Galv.	Galvanized
GDI	Grated Drain Inlet
GFRP	Glass Fiber Reinforced Polymer
Gr.	Grade
Grd.	Ground
GRP	Grouted Rubble Pavement
H	Height
(H)	Hinge
Horiz.	Horizontal
HS	High strength
HSS	Hollow Structural Section
HECO	Hawaiian Electric Company
HTL	High Tide Line
IB, Inbnd.	Inbound
In.	Inch
ID	Inside Diameter
IF	Inside Face
Int.	Interior
Inv.	Invert
Jt.	Joint
K	Kips
KF	Kip Foot
KSF	Kips Per Square Foot
KSI	Kips Per Square Inch
KLF	Kips Per Linear Foot
L	Length
lb., lbs., LBS.	Pound, Pounds
Lfg. Std.	Lighting Standard
LF	Linear Feet/Foot
Lin. Ft.	Linear Feet/Foot
LS	Lump Sum
Longit.	Longitudinal
M	Modified
MH	Manhole
Max.	Maximum
Mech.	Mechanical
Min.	Minimum
Misc.	Miscellaneous
MPH	Miles Per Hour
NF	Near Face
N	North
NIC	Not in Contract
No.	Number
NTS	Not to Scale
O/S	Offset
oc	On Center
Opn'g	Opening
OB, Outbnd.	Outbound
OD	Outside Diameter
OM	Object Marker
P(e)	Effective or Working Prestressing Force
PP	Precast Plank
Perf.	Perforated
PL	Plate
PCC	Portland Cement Concrete
PC	Point of Curvature
PCF	Pounds per Cubic Foot
PSF	Pounds per Square Foot
PSI	Pounds per Square Inch
PLF	Pounds per Linear Foot
PI	Point of Intersection of Tangents
PIVC	Point of Intersection of Vertical Curve
PT	Point of Tangency, Post Tensioned
Pt., Pts.	Point, Points
PRC	Point of Reverse Curvature
PVC	Polyvinyl Chloride
Prestr.	Prestressed
P/S	Prestressed Strands
PB	Pull Box
Q	Flow Rate
Rad., R	Radius
RF	Rear Face
Rebar	Reinforcing Bar
Ref.	Reference
Reinf.	Reinforced, Reinforcing, Reinforcement
Req'd.	Required
Ret.	Retaining
ROW	Right of Way
Rdwy.	Roadway
Sch.	Schedule
Sect.	Section
SDMH	Sewer Drain Manhole
Sht.	Sheet
SRA	Shrinkage Reducing Admixture
Sl.	Slope
S	South
Spc	Spacing
Sprd.	Spread
Spec.	Specification
SF	Square Feet
SY	Square Yard
SS. SSTL	Stainless Steel
Std.	Standard
Sta.	Station
Stagg.	Staggered
Stiff.	Stiffener
Stirr.	Stirrup
Str.	Straight
Struct.	Structure
SE	Super Elevation
Symm.	Symmetrical
Tan.	Tangent
Temp.	Temporary
Thk.	Thick
T	Top
T&B	Top and Bottom
TOD	Top of Deck
TFE	Top of Footing Elevation
TOW	Top of Wall
Tot.	Total
Transv.	Transverse
TS	Structural Tubing
Typ.	Typical
Undergrd.	Underground
UNO	Unless Noted Otherwise
Var.	Varies
Vert., V	Vertical
VC	Vertical Curve
VSM	Variable Message Sign
W/C	Water/Cement Ratio
w/	With
W	West
WWR	Welded Wire Reinforcing
WW	Wing Wall
WP	Work Point, Working Point
WS	Water Surface
Yr.	Year

STEPHEN T. PETERS
LICENSED PROFESSIONAL ENGINEER
NO. 17097-S
HAWAII, U.S.A.

THIS WORK WAS PREPARED BY ME OR UNDER MY SUPERVISION.

SIGNATURE EXPIRATION DATE OF THE LICENSE

STATE OF HAWAI'I
DEPARTMENT OF TRANSPORTATION
HIGHWAYS DIVISION

SYMBOLS AND ABBREVIATIONS

HAWAII BELT ROAD
HAMAKUA COAST BRIDGE REPAIRS
(WAILUKU, HAKALAU AND NANUE STREAM BRIDGES)
Project No. 19HK-01-22M

Scale: As Noted Date: Sept. 2021

SHEET No. S0.2 OF 2 SHEETS

ORIGINAL PLAN | SURVEY PLOTTED BY | DRAWN BY | TRACED BY | DESIGNED BY | QUANTITIES BY | CHECKED BY | DATE
NOTE BOOK No.

DRAWING NAME: Z:\OD ONGOING\20-040 B-CRITICAL PPR WAILUKU-HAKALAU-NANUE\01 CAD\09-27-21 REVISED TITLE SHEET\03 HCB-S0002 SYM-ABBR.DWG PLOT TIME: (09-27-21, 5:18 PM)

FED. ROAD DIST. NO.	STATE	PROJ. NO.	FISCAL YEAR	SHEET NO.	TOTAL SHEETS
HAWAII	HAW.	19HK-01-22M	2022	4	27

STRUCTURAL GENERAL NOTES

1. General Specifications: Hawaii Department of Transportation (HDOT), "Standard Specifications for Road and Bridge Construction", 2005, together with Special Provisions prepared for this contract.

2. Design Specifications:

   A. American Association of State Highway and Transportation Officials (AASHTO) 2020 "LRFD Bridge Design Specifications" (Ninth Edition) and its subsequent interim specifications with interim supplements and modifications by the HDOT Highways Division.

   B. HDOT Document "Design Criteria for Bridges and Structures" dated August 8, 2014 and HDOT Memorandum "Changes to Design Criteria for Bridges and Structures" dated January 8, 2018.

3. Materials:

   A. Structural Steel

      (1) All steel shall conform to the following requirements:

Rolled Steel Shapes	
(a) Channels	ASTM A36
(b) Angles	ASTM A36
(c) Plates and All Others	ASTM A36
(d) All Structural Steel shall be hot-dip zinc galvanized after fabrication	ASTM A123

      (2) All workmanship shall be in accordance with the latest AISC and AWS D1.5.

      (3) All welding, whether shop or field, shall be done by certified welders in conformance with the Bridge Welding Code AWS D1.5 of the American Welding Society. Filler Metal shall have a minimum tensile strength of 70 ksi. Welding shall be performed such that excessive concentrated heat does not warp any new or existing steel pieces being joined.

      (4) Field welding to existing steel shall not be permitted unless specifically shown or noted on drawings. See Standard Specifications and Special Provisions for pre-heat and other requirements. All field welding that damages any hot-dip zinc galvanized coating shall be repaired, prior to painting, using a zinc-based solder in accordance with ASTM A780.

      (5) See Special Provisions Section 501 for structural steel requirements. All holes shall be prepunched before shop priming and coating steel. Touch-up paint steel in field.

      (6) See Special Provisions Section 697 for painting requirements Shop and field applied paint shall be EverPel by Oceanit, or approved equal. Follow all paint manufacturer's requirements for base metal surface preparation and application of paint coating.

3. Materials (Cont.):

      (7) Paint color shall match the color of the existing surrounding bridge members. Paint sheen and color scheme shall be submitted to the Engineer for review and approval.

4. Construction Notes:

   A. Install protective devices to prevent all construction debris and fugitive dust from entering the river and banks. The Contractor shall submit working drawings for the protective devices to the Engineer for approval. Any work involving these protective devices shall be paid for under Item 209.1000 - Installation, Maintenance, Monitoring, and Removal of BMP and Work Platform - Wailuku Bridge. Work shall not begin until the Engineer approves the proposed system.

   B. The Contractor is prohibited from accessing the water under the bridge. This includes the entire area under the bridge within the State Right of Way. All access to the repair sites shall be from the top of the bridge or a temporary work platform. Work Platform shall be paid for under Item 209.1000 - Installation, Maintenance, Monitoring, and Removal of BMP and Work Platform - Wailuku Bridge.

   C. The Contractor shall be entirely responsible for the stability of the bridge and integrity of the members during construction. The Contractor shall make repairs in conformance with the sequences shown on the plans.

   D. The Contractor shall field verify all existing conditions, dimensions, and member sizes prior to fabrication of any bridge elements. The Engineer shall be notified immediately regarding any change of conditions or discrepancies between the plans and field investigation.

   E. The structural repair details shown on the plans are based on the Engineer's findings during the latest site investigation. If existing bridge members that are to remain, have deteriorated such they cannot be bolted or welded to, the Engineer shall be notified immediately.

   F. Work platform drawings and calculations, stamped by a Professional Structural Engineer, licensed in the State of Hawaii, shall be submitted to the Engineer for review and approval. Calculations shall include a structural assessment of all bridge components that support any portion of the work platform.

   G. Work platform shall be designed for the actual weights of required construction equipment and material plus the intended design Live Load but not to be less than a minimum uniform 20 pounds per square foot Live Load plus 75 pounds per linear foot Live Load applied at all cantilever edge overhangs. Design for lateral loads in conformance with Section 22 of the AASHTO "Guide Design Specifications for Bridge Temporary Works".

   H. No additional holes shall be added to structural steel members than what is shown on the plans.

4. Construction Notes (Cont.):

   I. The Contractor shall coordinate all traffic control and lane closure requirements with the State DOT Highways Division. The Contractor shall notify the State a minimum of 11 days prior to any requests for traffic control or lane closures. Lane closures may be scheduled on weekdays from 8:30 AM to 3:00 PM.

   J. The Contractor shall be responsible for the cost of all high strength bolting and welding inspection, including any non-destructive testing. Cost shall be incidental to the repair work. Reports shall be submitted to the Engineer for review and approval. All deficient work shall be corrected with no increase in cost to the State.

   K. The Contractor may obtain for review available As-Built drawings of the existing structure from the HDOT Highways Division, Design Branch located at Kakuhihewa Building, Room 609, 601 Kamokila Boulevard, Kapolei, HI 96707.

STEPHEN T. PETERS
LICENSED PROFESSIONAL ENGINEER
NO. 17097-S
HAWAII, U.S.A.

THIS WORK WAS PREPARED BY ME OR UNDER MY SUPERVISION.

SIGNATURE EXPIRATION DATE OF THE LICENSE

STATE OF HAWAI'I
DEPARTMENT OF TRANSPORTATION
HIGHWAYS DIVISION

WAILUKU STREAM BRIDGE
STRUCTURAL GENERAL NOTES
HAWAII BELT ROAD
HAMAKUA COAST BRIDGE REPAIRS
(WAILUKU, HAKALAU AND NANUE STREAM BRIDGES)
Project No. 19HK-01-22M

Scale: None Date: Sept. 2021

SHEET No. SA0.1 OF 1 SHEETS

ORIGINAL PLAN	SURVEY PLOTTED BY	DATE
	DRAWN BY	"
NOTE BOOK	TRACED BY	"
	DESIGNED BY	"
No.	QUANTITIES BY	"
	CHECKED BY	"

BRAWING NAME: Z:\DO ONGOING\20-040B-CRITICAL RPR WAILUKU-HAKALAU-NANUE\01 CADD\09-28-21 REVISED TITLE SHEET\HCR-SA0001 WAI GENNOTES.DWG PLOT TIME: 09-28-21, 4:12 PM

FED. ROAD DIST. NO.	STATE	PROJ. NO.	FISCAL YEAR	SHEET NO.	TOTAL SHEETS
HAWAII	HAW.	19HK-01-22M	2022	5	27

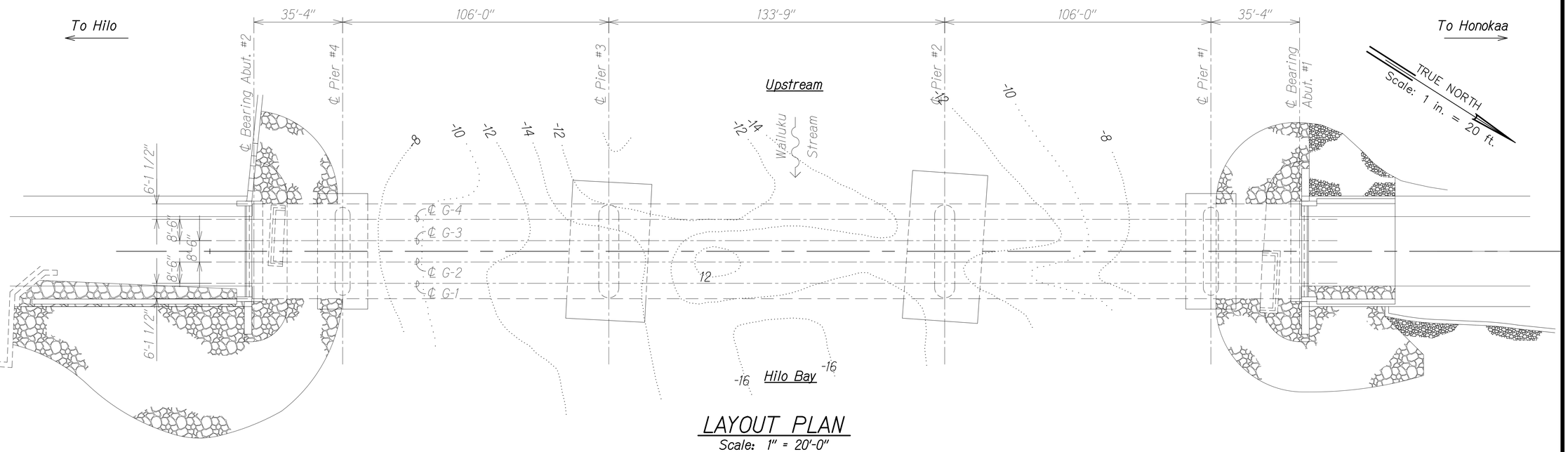

LAYOUT PLAN

Scale: 1" = 20'-0"

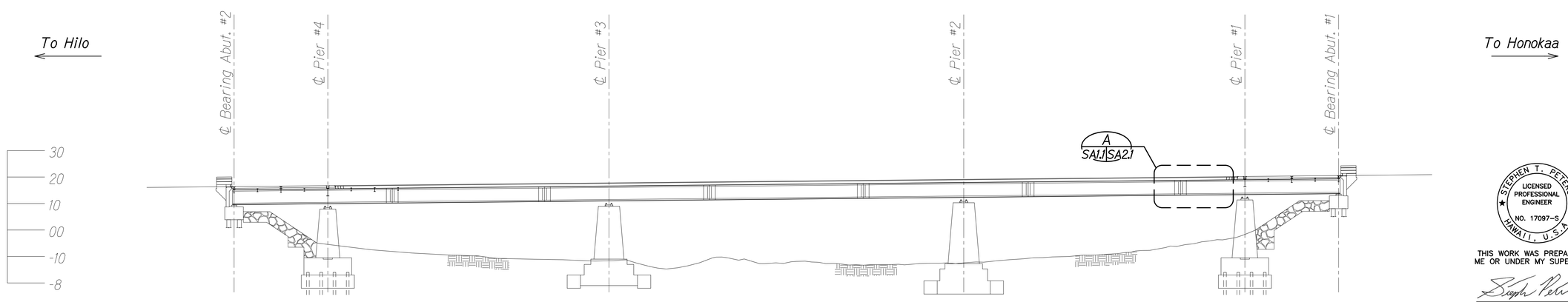

ELEVATION - OCEAN SIDE, LOOKING UPSTREAM

Scale: 1" = 20'-0"

ORIGINAL PLAN	SURVEY PLOTTED BY	DATE
	DRAWN BY	"
NOTE BOOK	TRACED BY	"
	DESIGNED BY	"
No.	QUANTITIES BY	"
	CHECKED BY	"

STEPHEN T. PETERS
LICENSED PROFESSIONAL ENGINEER
NO. 17097-S
HAWAII, U.S.A.

THIS WORK WAS PREPARED BY ME OR UNDER MY SUPERVISION.

SIGNATURE — EXPIRATION DATE OF THE LICENSE

STATE OF HAWAI'I
DEPARTMENT OF TRANSPORTATION
HIGHWAYS DIVISION

WAILUKU STREAM BRIDGE
LAYOUT PLAN AND ELEVATION

HAWAII BELT ROAD
HAMAKUA COAST BRIDGE REPAIRS
(WAILUKU, HAKALAU AND NANUE STREAM BRIDGES)
Project No. 19HK-01-22M

Scale: As Noted — Date: Sept. 2021

SHEET No. SA1.1 OF 1 SHEETS

DRAWING NAME: Z:\OD ONGOING\20-040.8-CRITICAL RPR WAILUKU-HAKALAU-NANUE\01 CAD\09-27-21 COMBINED\HCR-SA01101 WM PLAN.DWG PLOT TIME: 09-27-21, 12:44 PM

FED. ROAD DIST. NO.	STATE	PROJ. NO.	FISCAL YEAR	SHEET NO.	TOTAL SHEETS
HAWAII	HAW.	19HK-01-22M	2022	6	27

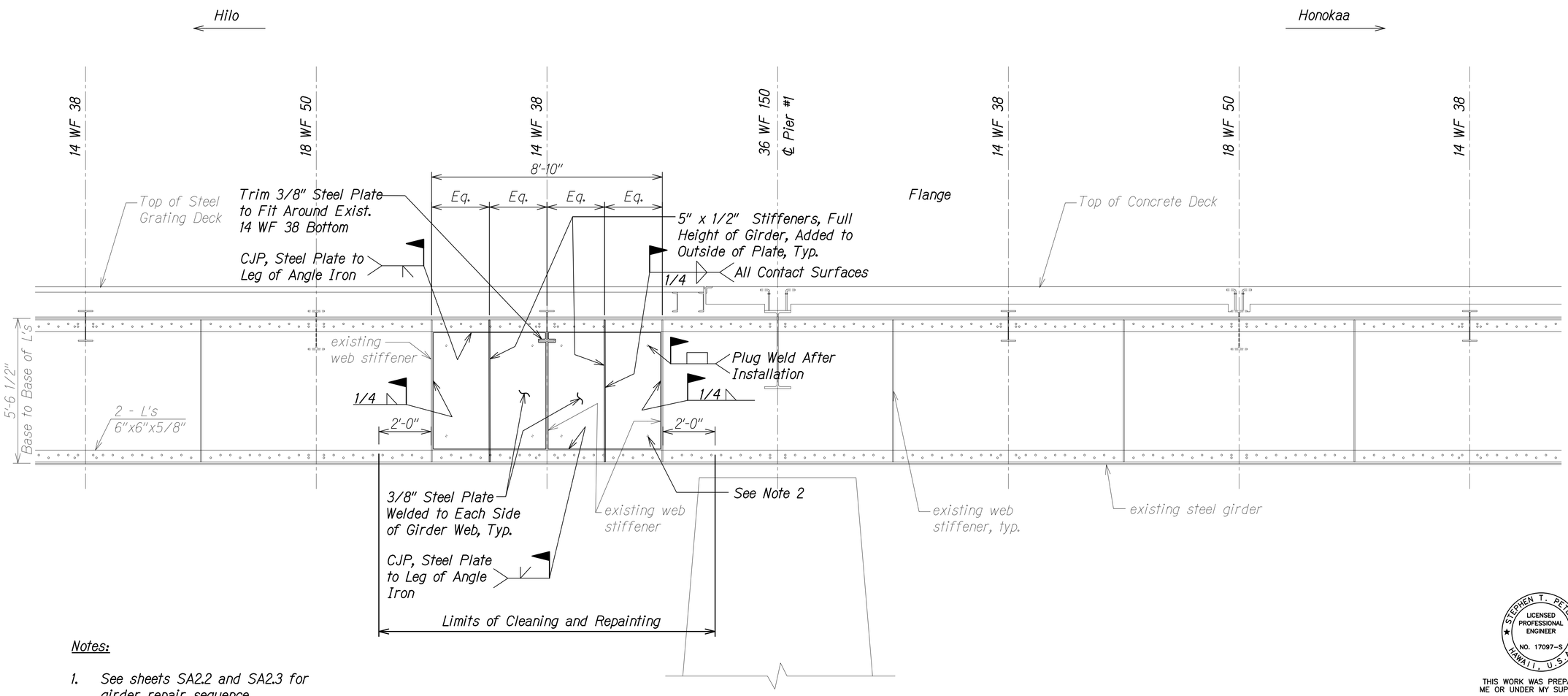

Notes:

1. See sheets SA2.2 and SA2.3 for girder repair sequence.

2. Contractor has the option of installing bolts in plate to aid in erection purposes. After installation, bolts shall be removed and holes shall be plug welded. The surface of all plug welds shall be repaired using a zinc-based solder in accordance with ASTM A780.

MAKAI GIRDER REPAIR ELEVATION DETAIL

Scale: 1/2" = 1'-0"

A
SA1.1 | SA2.1

ORIGINAL PLAN	SURVEY PLOTTED BY	DATE
	DRAWN BY	"
	TRACED BY	"
NOTE BOOK	DESIGNED BY	"
	QUANTITIES BY	"
No.	CHECKED BY	"

DRAWING NAME: Z:\OD ONGOING\20-040.8-CRITICAL RPR WAILUKU-HAKALAU-NANUE\01 CAD\09-28-21 REVISED TITLE SHEET\HCR-SA0201 WAI GIRDER.DWG PLOT TIME: 09-28-21, 5:42 PM

STEPHEN T. PETERS
LICENSED PROFESSIONAL ENGINEER
NO. 17097-S
HAWAII, U.S.A.

THIS WORK WAS PREPARED BY ME OR UNDER MY SUPERVISION.

SIGNATURE EXPIRATION DATE OF THE LICENSE

STATE OF HAWAI'I
DEPARTMENT OF TRANSPORTATION
HIGHWAYS DIVISION

WAILUKU STREAM BRIDGE
GIRDER ELEVATION

HAWAII BELT ROAD
HAMAKUA COAST BRIDGE REPAIRS
(WAILUKU, HAKALAU AND NANUE STREAM BRIDGES)
Project No. 19HK-01-22M

Scale: As Noted Date: Sept. 2021

SHEET No. SA2.1 OF 3 SHEETS

FED. ROAD DIST. NO.	STATE	PROJ. NO.	FISCAL YEAR	SHEET NO.	TOTAL SHEETS
HAWAII	HAW.	19HK-01-22M	2022	7	27

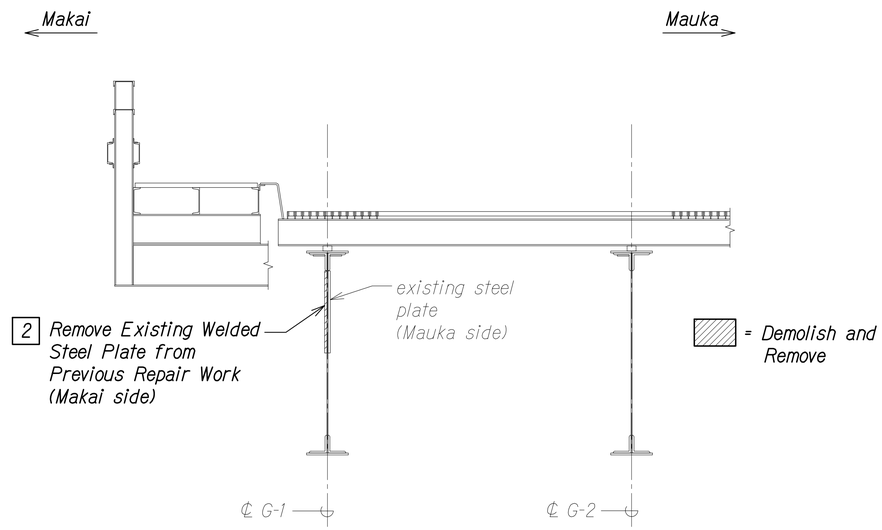

GIRDER REPAIR SECTION SEQUENCE 1

Scale: 1/2" = 1'-0"

A SA2.2 | SA2.2

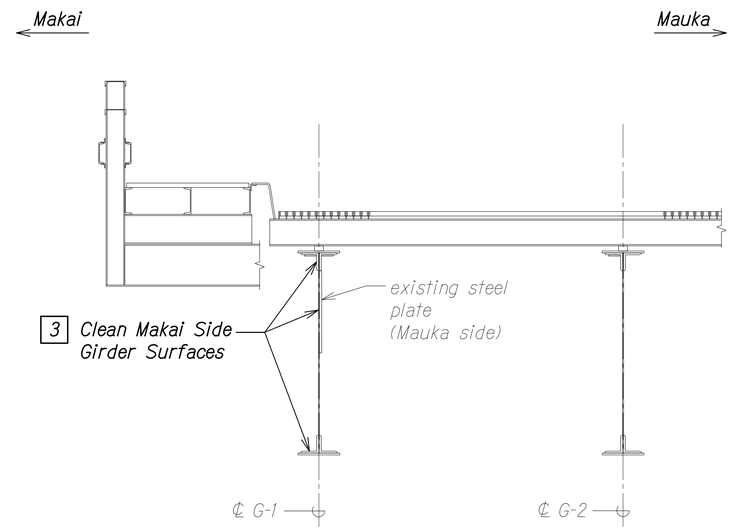

GIRDER REPAIR SECTION SEQUENCE 2

Scale: 1/2" = 1'-0"

B SA2.2 | SA2.2

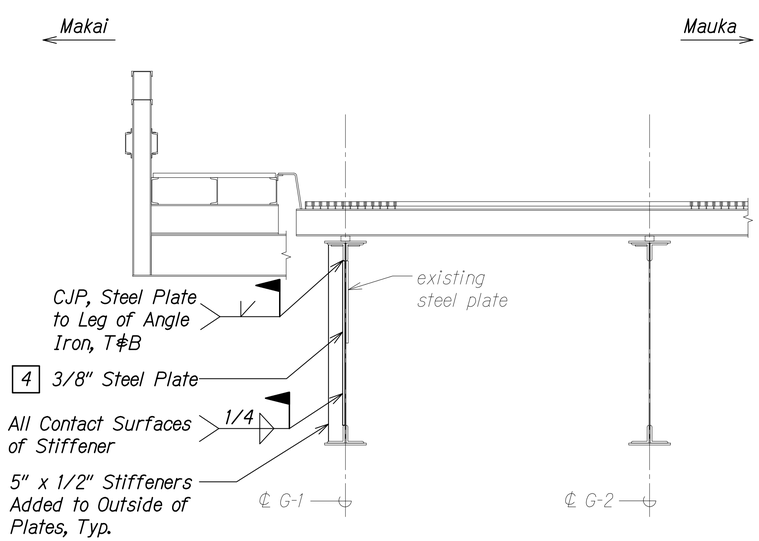

GIRDER REPAIR SECTION SEQUENCE 3

Scale: 1/2" = 1'-0"

C SA2.2 | SA2.2

REPAIR SEQUENCE:

1. Close Makai side traffic lane to vehicular use. See Structural General Notes, Sheet SA0.1 , Note 4.I.
2. Remove existing steel plate repair work welded to exterior Makai side of girder web.
3. Clean the entire surface of girder (Makai side) to remove all rust and scale. Surface preparation shall be in accordance with paint manufacturer's requirements.
4. Place full size steel plate over existing exterior Makai side girder web area and provide weld detail to angle iron on top and bottom flange. Additionally, weld steel plate to adjacent steel plates and stiffeners. Weld new stiffeners to outside of added plates where shown on the drawings. All new steel plate shall be hot-dip galvanized in accordance with ASTM A123.
5. Open Makai side traffic lane to vehicular use.

STEPHEN T. PETERS LICENSED PROFESSIONAL ENGINEER NO. 17097-S HAWAII, U.S.A.

THIS WORK WAS PREPARED BY ME OR UNDER MY SUPERVISION.

SIGNATURE EXPIRATION DATE OF THE LICENSE

STATE OF HAWAI'I
DEPARTMENT OF TRANSPORTATION
HIGHWAYS DIVISION

WAILUKU STREAM BRIDGE
GIRDER SECTIONS

HAWAII BELT ROAD
HAMAKUA COAST BRIDGE REPAIRS
(WAILUKU, HAKALAU AND NANUE STREAM BRIDGES)

Project No. 19HK-01-22M

Scale: As Noted Date: Sept. 2021

SHEET No. SA2.2 OF 3 SHEETS

ORIGINAL PLAN | NOTE BOOK No. | SURVEY PLOTTED BY | DRAWN BY | TRACED BY | DESIGNED BY | QUANTITIES BY | CHECKED BY | DATE

DRAWING NAME: Z:\00 ONGOING\20-040-B-CRITICAL RPR WAILUKU-HAKALAU-NANUE\01 CAD\09-28-21 REVISED TITLE SHEET\HCR-SA0201 WA GIRDER.DWG PLOT TIME: 09-28-21, 4:14 PM

FED. ROAD DIST. NO.	STATE	PROJ. NO.	FISCAL YEAR	SHEET NO.	TOTAL SHEETS
HAWAII	HAW.	19HK-01-22M	2022	8	27

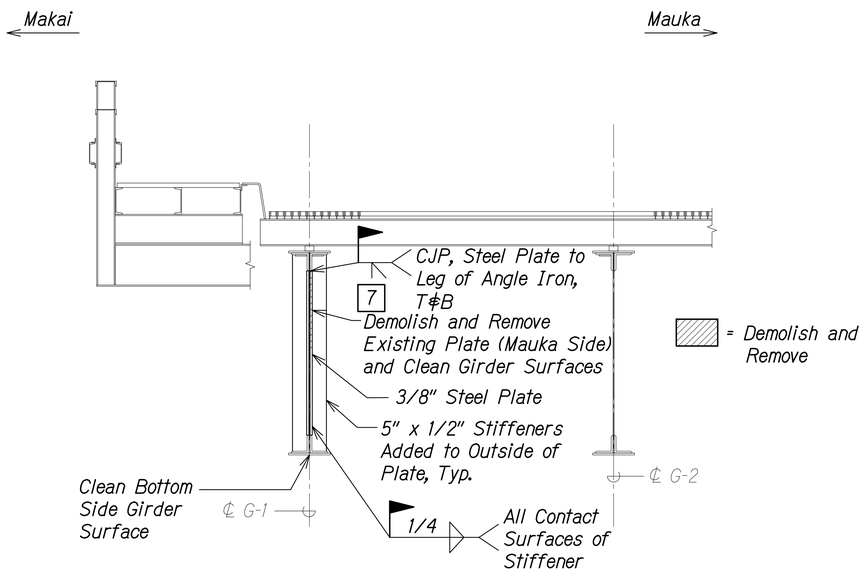

GIRDER REPAIR SECTION SEQUENCE 4

Scale: 1/2" = 1'-0"

A SA2.3 | SA2.3

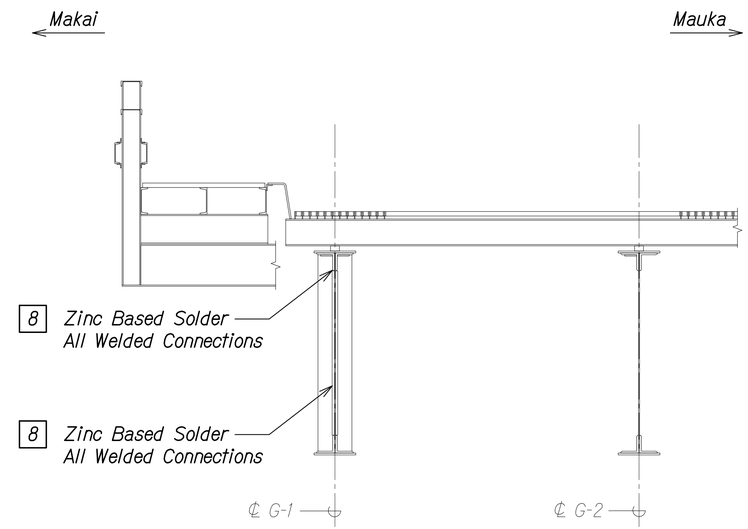

GIRDER REPAIR SECTION SEQUENCE 5

Scale: 1/2" = 1'-0"

B SA2.3 | SA2.3

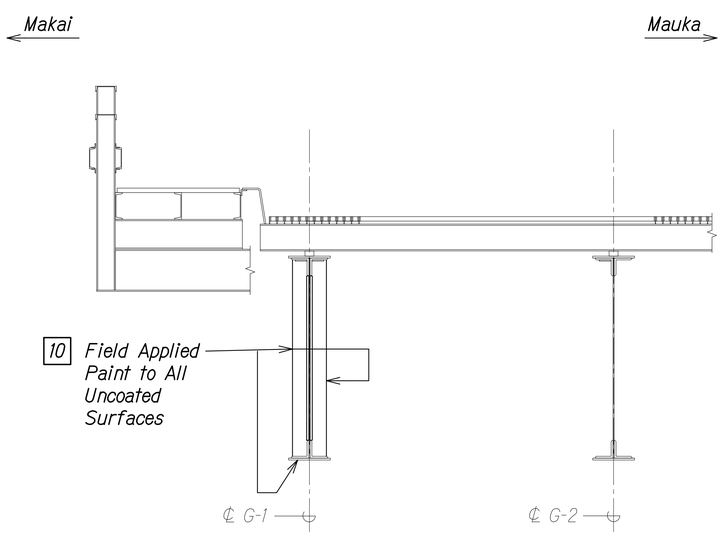

GIRDER REPAIR SECTION SEQUENCE 6

Scale: 1/2" = 1'-0"

C SA2.3 | SA2.3

REPAIR SEQUENCE:

6 Close Makai side traffic lane to vehicular use. See Structural General Notes, Sheet SA0.1, Note 4.I.

7 Repeat Steps 2 through 4 for Mauka side of girder web. Clean bottom side of girder surface to remove all rust and scale.

8 Touch up all areas that have been welded using a zinc based solder in accordance with ASTM A780.

9 Open Makai side traffic lane to vehicular use.

10 Coat all uncoated surfaces of girder web, flange, and stiffeners with specified paint system.

STEPHEN T. PETERS
LICENSED PROFESSIONAL ENGINEER
NO. 17097-S
HAWAII, U.S.A.

THIS WORK WAS PREPARED BY ME OR UNDER MY SUPERVISION.

SIGNATURE EXPIRATION DATE OF THE LICENSE

STATE OF HAWAI'I
DEPARTMENT OF TRANSPORTATION
HIGHWAYS DIVISION

WAILUKU STREAM BRIDGE
GIRDER SECTIONS

HAWAII BELT ROAD
HAMAKUA COAST BRIDGE REPAIRS
(WAILUKU, HAKALAU AND NANUE STREAM BRIDGES)
Project No. 19HK-01-22M

Scale: As Noted Date: Sept. 2021

SHEET No. SA2.3 OF 3 SHEETS

ORIGINAL PLAN | NOTE BOOK No. | SURVEY PLOTTED BY | DRAWN BY | TRACED BY | DESIGNED BY | QUANTITIES BY | CHECKED BY | DATE

DRAWING NAME: Z:\00 ONGOING\20-040.B-CRITICAL RPR WAILUKU-HAKALAU-NANUE\01 CAD\09-28-21 REVISED TITLE SHEET\HCR-SA2201 WA GIRDER.DWG PLOT TIME: 09-28-21, 4:14 PM

FED. ROAD DIST. NO.	STATE	PROJ. NO.	FISCAL YEAR	SHEET NO.	TOTAL SHEETS
HAWAII	HAW.	19HK-01-22M	2022	9	27

STRUCTURAL GENERAL NOTES

1. General Specifications: Hawaii Department of Transportation (HDOT), "Standard Specifications for Road and Bridge Construction", 2005, together with Special Provisions prepared for this contract.

2. Design Specifications:

   A. American Association of State Highway and Transportation Officials (AASHTO) 2020 "LRFD Bridge Design Specifications" (Ninth Edition) and its subsequent interim specifications with interim supplements and modifications by the HDOT Highways Division.

   B. HDOT Document "Design Criteria for Bridges and Structures" dated August 8, 2014 and HDOT Memorandum "Changes to Design Criteria for Bridges and Structures" dated January 8, 2018.

3. Materials:

   A. Structural Steel

      (1) All steel shall conform to the following requirements:

      Rolled Steel Shapes

      (a) Channels — ASTM A36

      (b) Angles — ASTM A36

      (c) Plates and All Others — ASTM A36

      (2) All workmanship shall be in accordance with the latest AISC and AWS D1.5.

      (3) All welding, whether shop or field, shall be done by certified welders in conformance with the Bridge Welding Code AWS D1.5 of the American Welding Society. Filler Metal shall have a minimum tensile strength of 70 ksi.

      (4) Field welding to existing steel shall not be permitted unless specifically shown or noted on drawings. See Standard Specifications and Special Provisions for pre-heat and other requirements. Welding shall be performed such that excessive concentrated heat does not warp any new or existing steel pieces being joined.

      (5) Where specified in the contract documents, all steel to steel bolted connections shall be designated as slip-critical. Paint blocking/masking shall be detailed as shown on the plans and the accompanying special provisions. Bolts shall be tightened with the proper amount of pretensioned clamping force.

      (6) All other bolted connections shall be classified as pre-tensioned connections.

3. Materials (Cont.):

      (7) All bolt assemblies which connect steel to steel shall be TnA 144 - Type 1 Grade 144 Torque-and-Angle Fixed-Spline Structural bolt assembly manufactured in accordance with ASTM F3148, unless otherwise noted. Nuts shall conform to ASTM A563 and washers shall conform to ASTM F436. All nuts shall be lubricated with Clean Lube, acrylic latex-based lubricant in accordance with ASTM A563. Bolt, Nut, and Washer Assembly shall be galvanized to a Class 55 thickness in accordance with ASTM B695. Round button head shall be placed on the exterior (visible) face of the connection plate assembly.

      (8) All bolt assemblies shall be touch-up field painted with the specified paint system after assembly.

      (9) See Special Provisions Section 501 for structural steel requirements. All holes shall be prepunched before shop priming and coating steel. Touch-up paint steel in field.

      (10) See Special Provisions Section 697 for painting requirements Shop and field applied paint shall be a 3-coat paint system (zinc primer, epoxy intermediate, and polyurethane topcoat).

      (11) Paint color shall match the color of the existing surrounding bridge members. Paint sheen shall be gloss and color scheme shall be submitted to the Engineer for review and approval.

4. Construction Notes:

   A. Install protective devices to prevent all construction debris and fugitive dust from entering the river and banks. The Contractor shall submit working drawings for the protective devices to the Engineer for approval. Any work involving these protective devices shall be paid for under Item 209.1100 - Installation, Maintenance, Monitoring, and Removal of BMP and Work Platform - Hakalau Bridge. Work shall not begin until the Engineer approves the proposed system.

   B. The Contractor is prohibited from accessing the ground or water under the bridge. This includes the entire area under the bridge within the State Right of Way. All access to the repair sites shall be from the top of the bridge or a temporary work platform. Work Platform shall be paid for under Item 209.1100 - Installation, Maintenance, Monitoring, and Removal of BMP and Work Platform - Hakalau Bridge. There are high contaminants of lead in the soil below the bridge and any contact with the ground is prohibited.

   C. The Contractor shall be entirely responsible for the stability of the bridge and integrity of the members during construction. The addition of temporary bracing prior to the removal and replacement of bridge elements shall be anticipated. At a minimum, the temporary bracing shall have equal or greater strength and stiffness than the member it is replacing. The temporary bracing plan and calculations, stamped by a Structural Engineer, licensed in the State of Hawaii, shall be submitted to the Engineer for review and approval prior to any work being performed.

5. Construction Notes (Cont.):

   D. The Contractor shall field verify all existing conditions, dimensions, and member sizes prior to fabrication of any bridge elements. The Engineer shall be notified immediately regarding any change of conditions or discrepancies between the plans and field investigation.

   E. The structural repair details shown on the plans are based on the Engineer's findings during the latest site investigation. If existing bridge members that are to remain, have deteriorated such they cannot be bolted or welded to, the Engineer shall be notified immediately.

   F. Work platform drawings and calculations, stamped by a Professional Structural Engineer, licensed in the State of Hawaii, shall be submitted to the Engineer for review and approval. Calculations shall include a structural assessment of all bridge components that support any portion of the work platform.

   G. Work platform shall be designed for the actual weights of required construction equipment and material plus the intended design Live Load but not to be less than a minimum uniform 20 pounds per square foot Live Load plus 75 pounds per linear foot Live Load applied at all cantilever edge overhangs. Design for lateral loads in conformance with Section 22 of the AASHTO "Guide Design Specifications for Bridge Temporary Works".

   H. At locations where existing rivets are to be replaced with new High-Strength bolts, new bolt sizes shall match the diameter of the rivets they replace.

   I. The Contractor shall coordinate all traffic control and lane closure requirements with the State DOT Highways Division. The Contractor shall notify the State a minimum of 11 days prior to any requests for traffic control or lane closures. Lane closures may be scheduled on weekdays from 8:30 AM to 3:00 PM.

   J. The Contractor shall be responsible for the cost of all high strength bolting and welding inspection, including any non-destructive testing. Cost shall be incidental to the repair work. Reports shall be submitted to the Engineer for review and approval. All deficient work shall be corrected with no increase in cost to the State.

   K. The Contractor may obtain for review available As-Built drawings of the existing structure from the HDOT Highways Division, Design Branch located at Kakuhihewa Building, Room 609, 601 Kamokila Boulevard, Kapolei, HI 96707.

STEPHEN T. PETERS
LICENSED PROFESSIONAL ENGINEER
NO. 17097-S
HAWAII, U.S.A.

THIS WORK WAS PREPARED BY ME OR UNDER MY SUPERVISION.

SIGNATURE — EXPIRATION DATE OF THE LICENSE 4-30-22

STATE OF HAWAI'I
DEPARTMENT OF TRANSPORTATION
HIGHWAYS DIVISION

HAKALAU STREAM BRIDGE
STRUCTURAL GENERAL NOTES
HAWAII BELT ROAD
HAMAKUA COAST BRIDGE REPAIRS
(WAILUKU, HAKALAU AND NANUE STREAM BRIDGES)
Project No. 19HK-01-22M
Scale: None — Date: Sept. 2021

SHEET No. SB0.1 OF 1 SHEETS

ORIGINAL PLAN	SURVEY PLOTTED BY	DATE
	DRAWN BY	"
NOTE BOOK	TRACED BY	"
	DESIGNED BY	"
No.	QUANTITIES BY	"
	CHECKED BY	"

DRAWING NAME: Z:\DO ONGOING\20-040B-CRITICAL RPR WAILUKU-HAKALAU-NANUE\01 CAD\09-28-21 REVISED TITLE SHEET\HCR-SB0001 HAK GENNOTES.DWG PLOT TIME: 09-28-21, 4:15 PM\

FED. ROAD DIST. NO.	STATE	PROJ. NO.	FISCAL YEAR	SHEET NO.	TOTAL SHEETS
HAWAII	HAW.	19HK-01-22M	2022	10	27

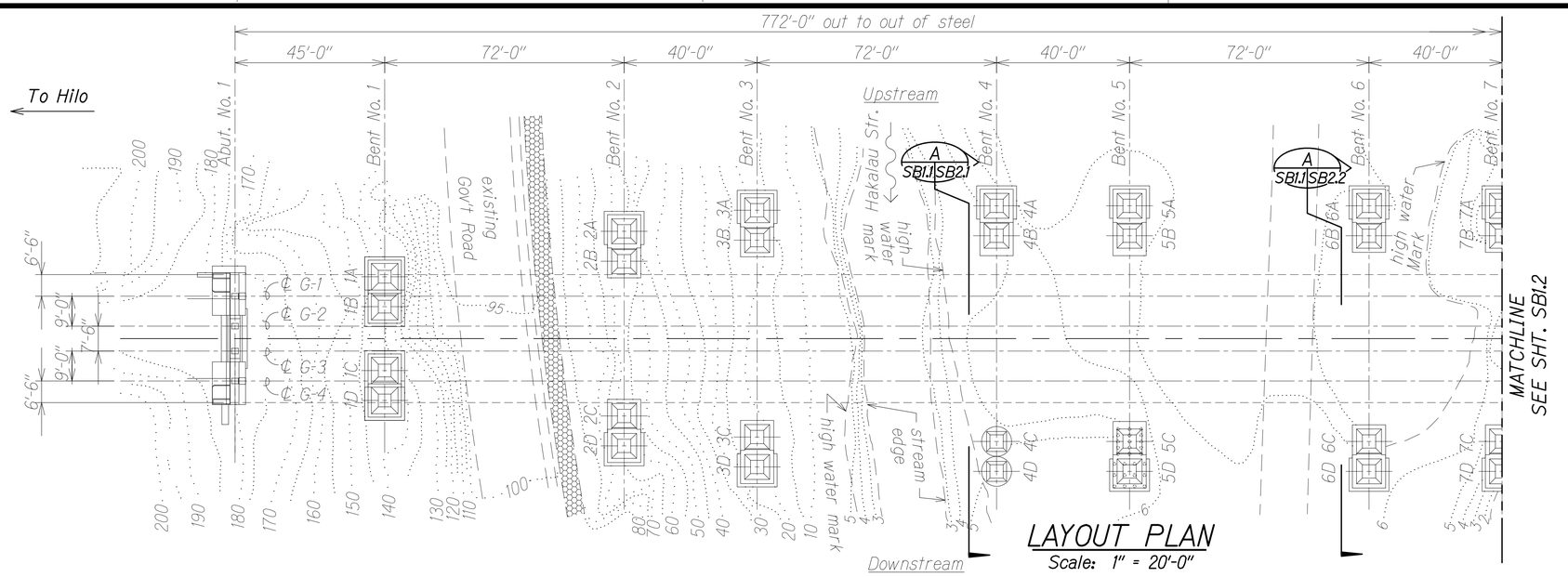

LAYOUT PLAN

Scale: 1" = 20'-0"

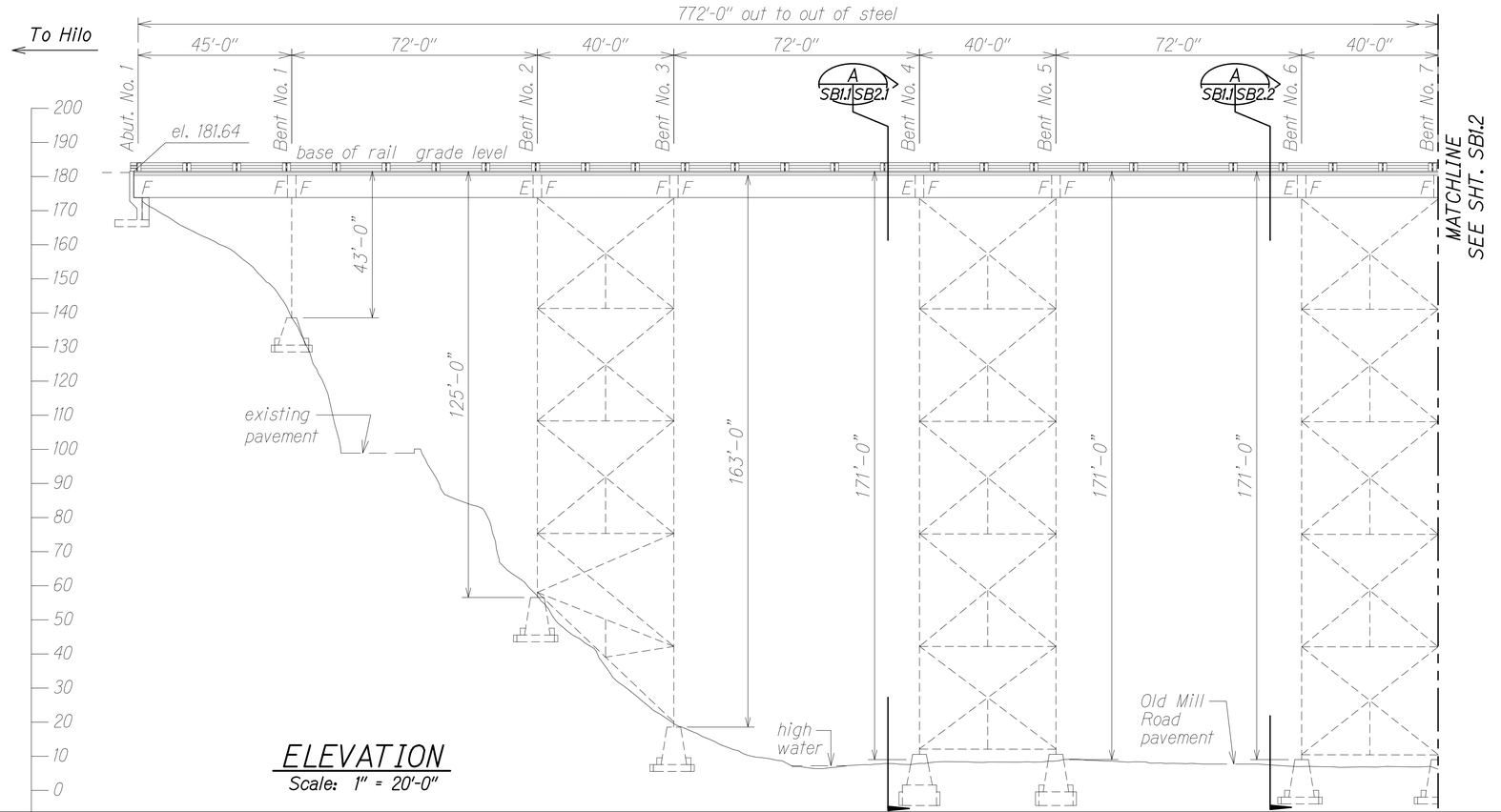

ELEVATION

Scale: 1" = 20'-0"

TRUE NORTH
Scale: 1 in. = 20 ft.

Legend:

F Fixed Bearing

E Expansion Bearing

STEPHEN T. PETERS
LICENSED PROFESSIONAL ENGINEER
NO. 17097-S
HAWAII, U.S.A.

THIS WORK WAS PREPARED BY ME OR UNDER MY SUPERVISION.

SIGNATURE — EXPIRATION DATE OF THE LICENSE

STATE OF HAWAI'I
DEPARTMENT OF TRANSPORTATION
HIGHWAYS DIVISION

HAKALAU STREAM BRIDGE
LAYOUT PLAN AND ELEVATION

HAWAII BELT ROAD
HAMAKUA COAST BRIDGE REPAIRS
(WAILUKU, HAKALAU AND NANUE STREAM BRIDGES)
Project No. 19HK-01-22M

Scale: As Noted — Date: Sept. 2021

SHEET No. SB1.1 OF 2 SHEETS

ORIGINAL PLAN — SURVEY PLOTTED BY / DRAWN BY / TRACED BY / DESIGNED BY / QUANTITIES BY / CHECKED BY — DATE
NOTE BOOK No.

DRAWING NAME: Z:\09 ONGOING\20-640.B-CRITICAL RPR WAILUKU-HAKALAU-NANUE\01 CAD\09-27-21 COMBINED\HCR-SB0101 HAK PLAN.DWG PLOT TIME: 09-27-21, 12:49 PM

FED. ROAD DIST. NO.	STATE	PROJ. NO.	FISCAL YEAR	SHEET NO.	TOTAL SHEETS
HAWAII	HAW.	19HK-01-22M	2022	11	27

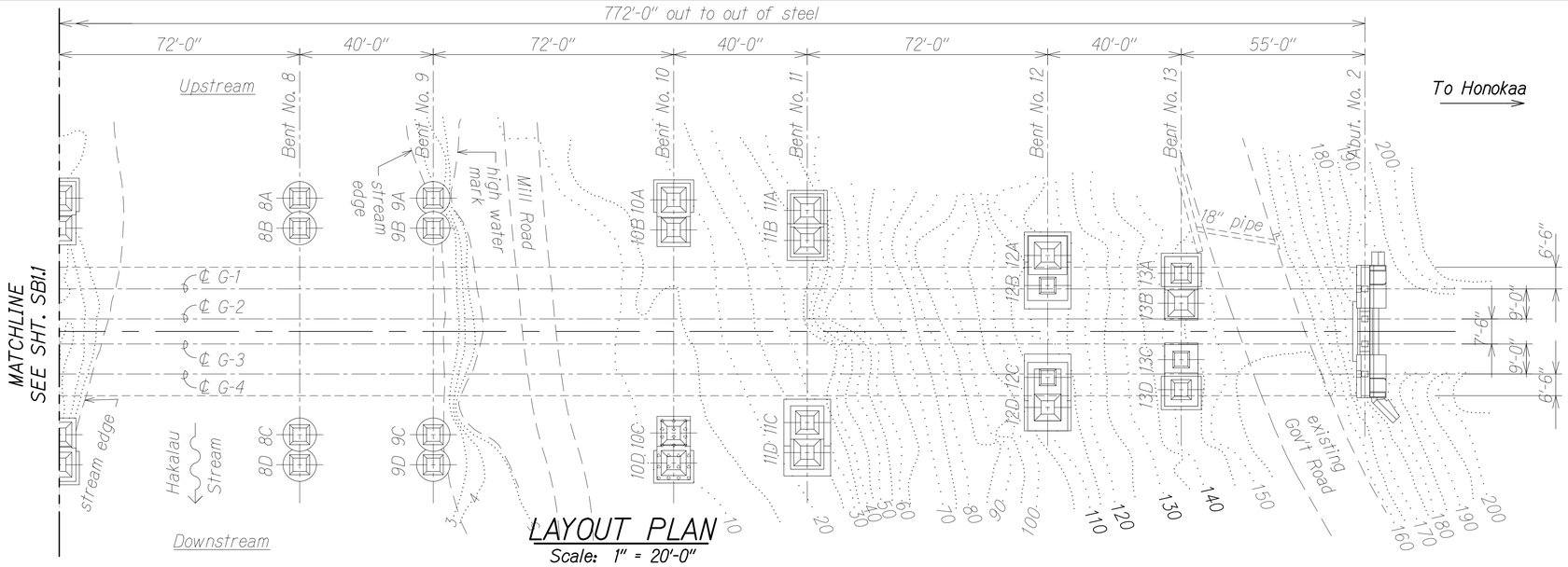

LAYOUT PLAN

Scale: 1" = 20'-0"

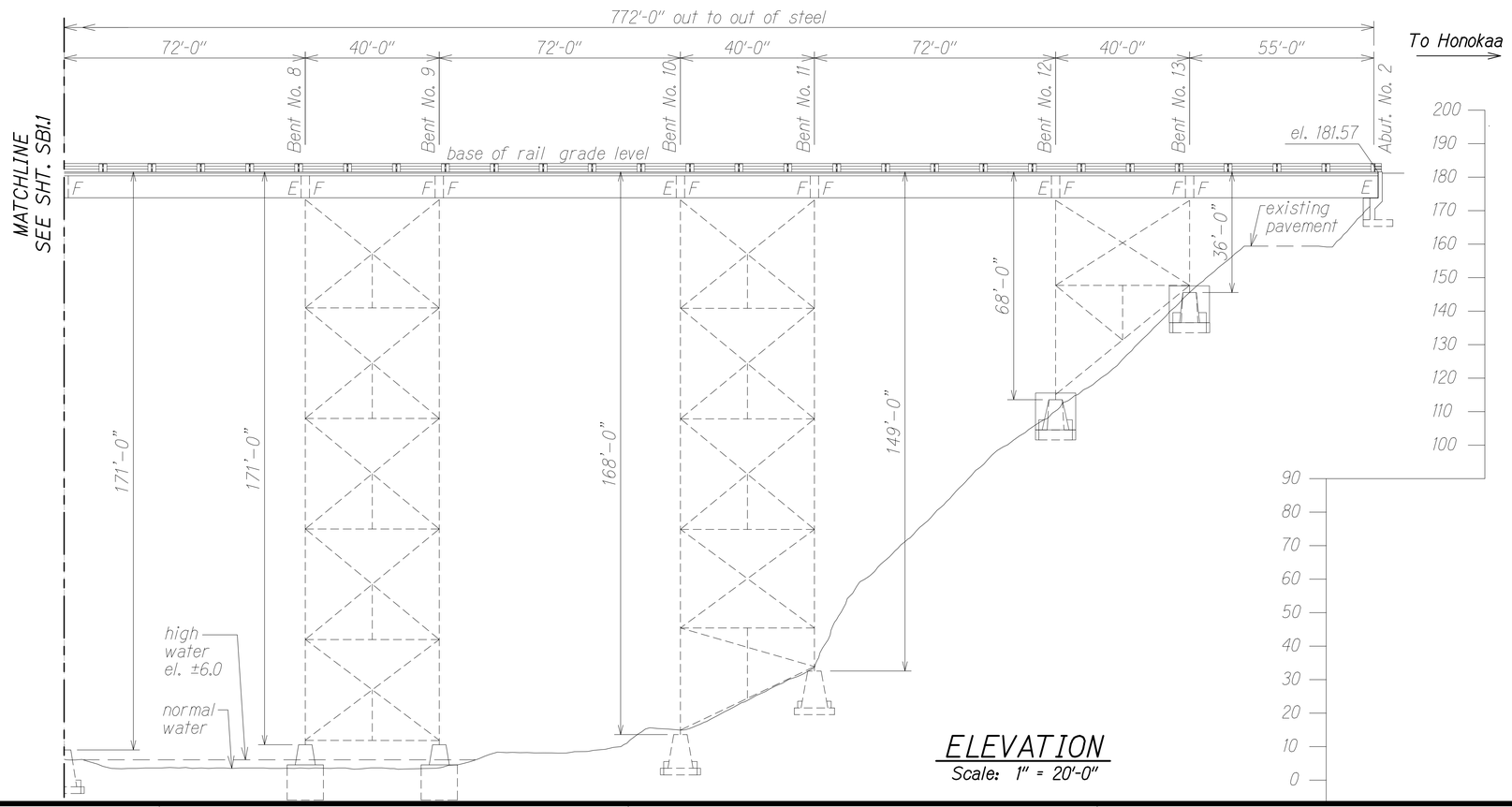

ELEVATION

Scale: 1" = 20'-0"

TRUE NORTH
Scale: 1 in. = 20 ft.

Legend:

F Fixed Bearing

E Expansion Bearing

STEPHEN T. PETERS
LICENSED PROFESSIONAL ENGINEER
NO. 17097-S
HAWAII, U.S.A.

THIS WORK WAS PREPARED BY ME OR UNDER MY SUPERVISION.

SIGNATURE — EXPIRATION DATE OF THE LICENSE

STATE OF HAWAI'I
DEPARTMENT OF TRANSPORTATION
HIGHWAYS DIVISION

HAKALAU STREAM BRIDGE
LAYOUT PLAN AND ELEVATION

HAWAII BELT ROAD
HAMAKUA COAST BRIDGE REPAIRS
(WAILUKU, HAKALAU AND NANUE STREAM BRIDGES)
Project No. 19HK-01-22M

Scale: As Noted — Date: Sept. 2021

SHEET No. SBI.2 OF 2 SHEETS

ORIGINAL PLAN | NOTE BOOK No. | SURVEY PLOTTED BY | DRAWN BY | TRACED BY | DESIGNED BY | QUANTITIES BY | CHECKED BY | DATE

DRAWING NAME: Z:\DB ONGOING\20-040.B-CRITICAL RPR WAILUKU-HAKALAU-NANUE\01 CAD\09-27-21 COMBINED\HCR-SB01.01 HAK PLAN.DWG PLOT TIME: 09-27-21, 12:49 PM

FED. ROAD DIST. NO.	STATE	PROJ. NO.	FISCAL YEAR	SHEET NO.	TOTAL SHEETS
HAWAII	HAW.	19HK-01-22M	2022	12	27

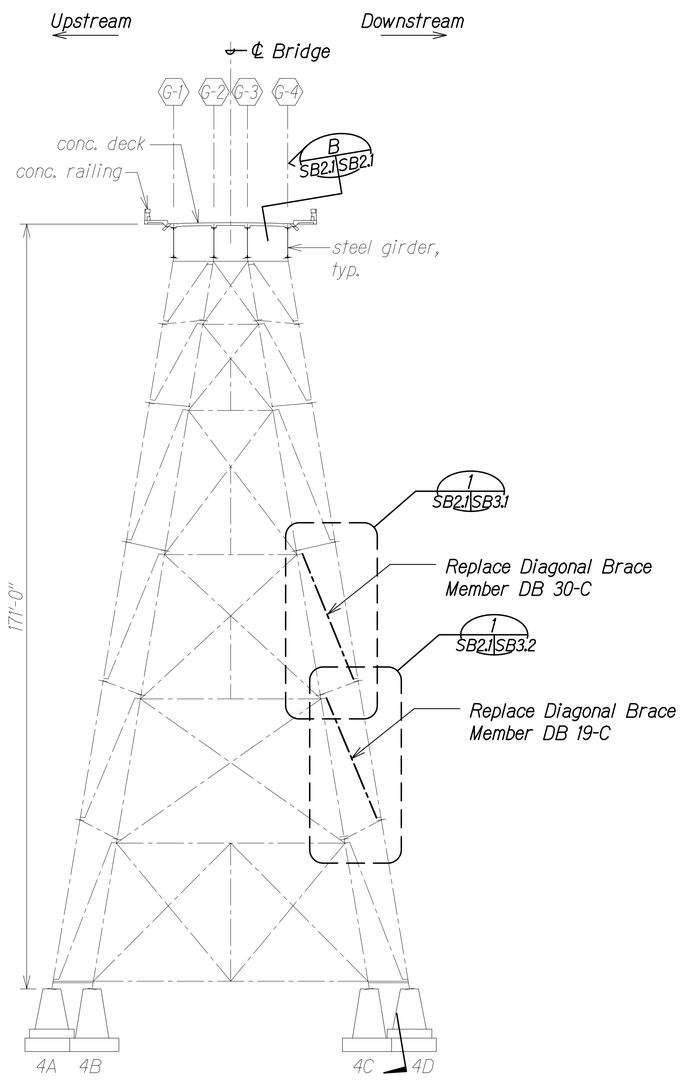

BENT NO. 4 SECTION ELEVATION
LOOKING TOWARD HONOKA'A
Scale: 1/16" = 1'-0"

A
SB1.1 SB2.1
SB2.1

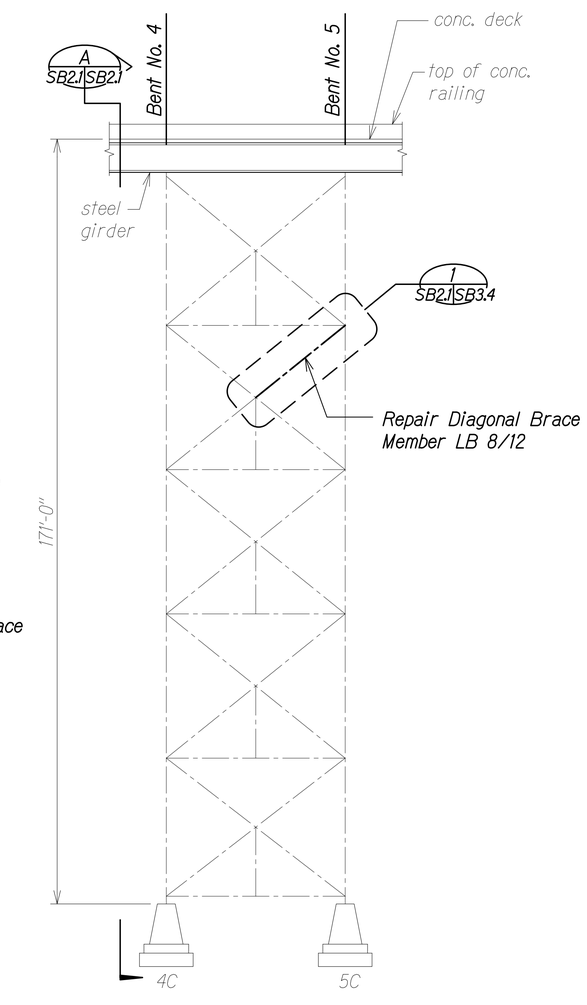

BENT NOS. 4 AND 5 SECTION ELEVATION
INTERIOR DOWNSTREAM FACE
Scale: 1/16" = 1'-0"

B
SB2.1 SB2.1

ORIGINAL PLAN	SURVEY PLOTTED BY	DATE
	DRAWN BY	"
NOTE BOOK	TRACED BY	"
	DESIGNED BY	"
	QUANTITIES BY	"
No.	CHECKED BY	"

DRAWING NAME: Z:\OD ONGOING\20-040.8-CRITICAL RPR WAILUKU-HAKALAU-NANUE\01 CAD\09-27-21 COMBINED\HCR-SB2201 HAK BENTS.DWG PLOT TIME 09-27-21 12:50 PM

STEPHEN T. PETERS
LICENSED PROFESSIONAL ENGINEER
NO. 17097-S
HAWAII, U.S.A.

THIS WORK WAS PREPARED BY ME OR UNDER MY SUPERVISION.

SIGNATURE EXPIRATION DATE OF THE LICENSE

STATE OF HAWAI'I
DEPARTMENT OF TRANSPORTATION
HIGHWAYS DIVISION

HAKALAU STREAM BRIDGE SECT.
ELEVS. - BENT NOS. 4 AND 5

HAWAII BELT ROAD
HAMAKUA COAST BRIDGE REPAIRS
(WAILUKU, HAKALAU AND NANUE STREAM BRIDGES)
Project No. 19HK-01-22M

Scale: As Noted Date: Sept. 2021

SHEET No. SB2.1 OF 2 SHEETS

FED. ROAD DIST. NO.	STATE	PROJ. NO.	FISCAL YEAR	SHEET NO.	TOTAL SHEETS
HAWAII	HAW.	19HK-01-22M	2022	13	27

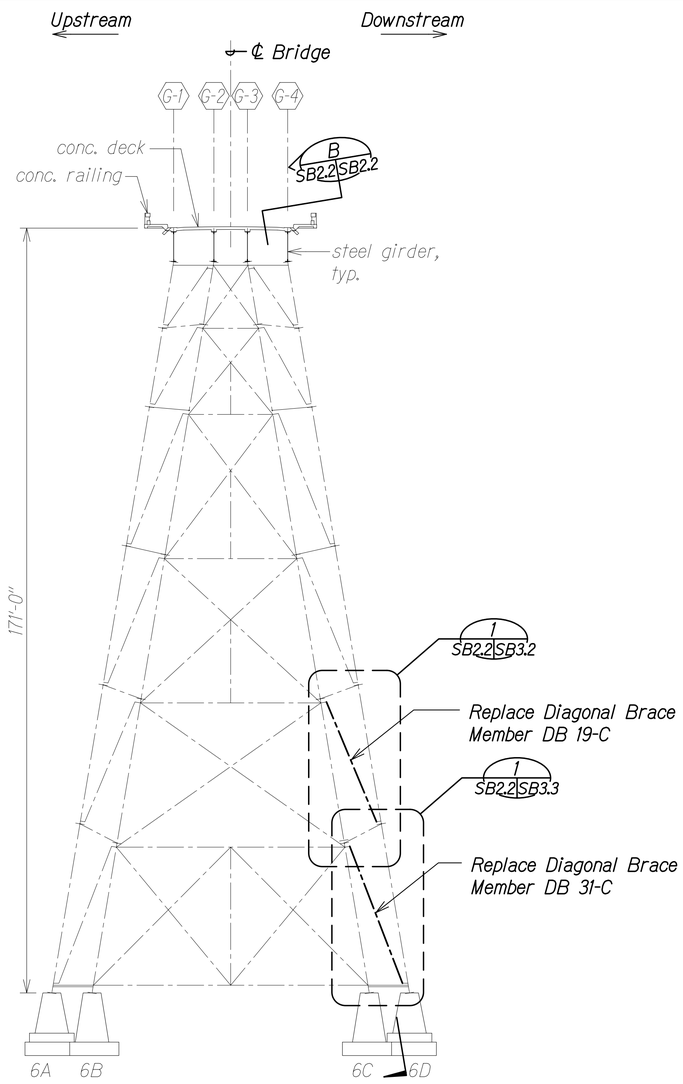

BENT NO. 6 SECTION ELEVATION
LOOKING TOWARD HONOKA'A (A SB1.1 SB2.2)
Scale: 1/16" = 1'-0"

SB2.2

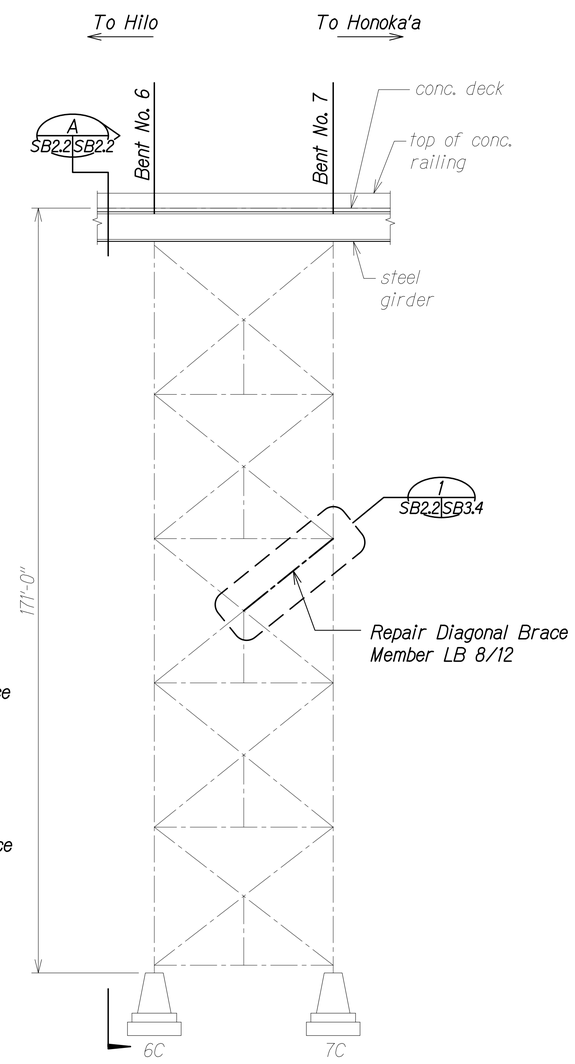

BENT NOS. 6 AND 7 SECTION ELEVATION
INTERIOR DOWNSTREAM FACE (B SB2.2 SB2.2)
Scale: 1/16" = 1'-0"

ORIGINAL PLAN	SURVEY PLOTTED BY	DATE
	DRAWN BY	
NOTE BOOK	TRACED BY	
	DESIGNED BY	
No.	QUANTITIES BY	
	CHECKED BY	

DRAWING NAME: Z:\OD ONGOING\20-040.8-CRITICAL RPR WAILUKU-HAKALAU-NANUE\01 CAD\09-27-21 COMBINED\HCR-SB0201 HAK BENTS.DWG PLOT TIME: 09-27-21, 12:51 PM

STEPHEN T. PETERS
LICENSED PROFESSIONAL ENGINEER
NO. 17097-S
HAWAII, U.S.A.

THIS WORK WAS PREPARED BY ME OR UNDER MY SUPERVISION.

SIGNATURE EXPIRATION DATE OF THE LICENSE

STATE OF HAWAI'I
DEPARTMENT OF TRANSPORTATION
HIGHWAYS DIVISION

HAKALAU STREAM BRIDGE SECT.
ELEVS. - BENT NOS. 6 AND 7

HAWAII BELT ROAD
HAMAKUA COAST BRIDGE REPAIRS
(WAILUKU, HAKALAU AND NANUE STREAM BRIDGES)
Project No. 19HK-01-22M

Scale: As Noted Date: Sept. 2021

SHEET No. SB2.2 OF 2 SHEETS

FED. ROAD DIST. NO.	STATE	PROJ. NO.	FISCAL YEAR	SHEET NO.	TOTAL SHEETS
HAWAII	HAW.	19HK-01-22M	2022	14	27

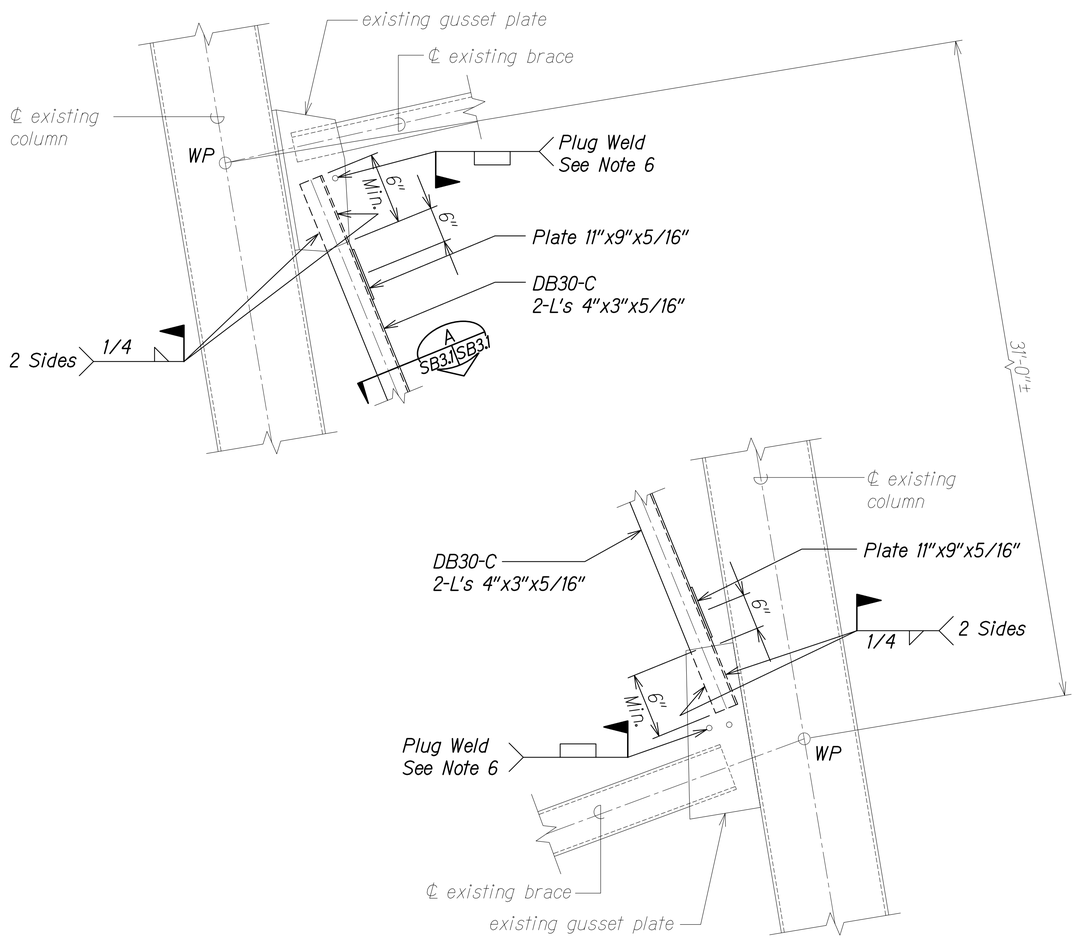

MEMBER DB30-C REPAIR DETAIL

1 SB2.1 SB3.1

Scale: 1" = 1'-0"

Notes:

1. Contractor to verify dimensions. See Structural General Notes Sht. SB0.1, Note 4.D.
2. Contractor shall inspect existing gusset plate. If the structural integrity of the gusset plate is in question or welding to the gusset plate is not possible, the Engineer shall be immediately notified.
3. The Engineer will determine if the gusset plate is reusable or if a doubler plate is required. As applicable, weld doubler plate to exterior face of gusset plate. For doubler plate detail, see Sht. SB3.5.
4. Contractor shall install all necessary temporary bracing prior to removal of existing members. See Structural General Notes, Sht. SB0.1 Note 4.C.
5. Grind welds off of backside of gusset plate after removal of diagonal members. Remove any bolts or rivets.
6. Clean surfaces of existing gusset plate of paint, rust, and scale. Follow paint manufacturer's requirements for surface preparation. Plug weld all unused holes in gusset plate.
7. Fabricate new diagonal brace member DB30-C. Contractor to determine lengths of new members. Shop paint diagonal brace member. Hold paint 6" back from edge of gusset plate.
8. Install new diagonal brace member. Note: Temporary holes for erection bolts may be installed at Contractor's option. After member is installed, temporary erection bolt holes shall be plug welded.
9. Weld new diagonal member to inside face of gusset plate.
10. Field apply specified paint system to all unpainted and clean surfaces of diagonal brace member and gusset plates.

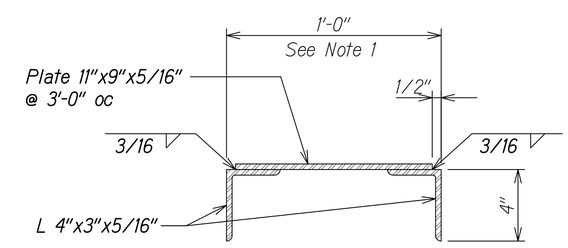

DB30-C SECTION

A SB3.1 SB3.1

Scale: 3" = 1'-0"

STEPHEN T. PETERS
LICENSED PROFESSIONAL ENGINEER
NO. 17097-S
HAWAII, U.S.A.

THIS WORK WAS PREPARED BY ME OR UNDER MY SUPERVISION.

SIGNATURE — EXPIRATION DATE OF THE LICENSE

STATE OF HAWAI'I
DEPARTMENT OF TRANSPORTATION
HIGHWAYS DIVISION

HAKALAU STREAM BRIDGE
SECTION AND DETAIL

HAWAII BELT ROAD
HAMAKUA COAST BRIDGE REPAIRS
(WAILUKU, HAKALAU AND NANUE STREAM BRIDGES)
Project No. 19HK-01-22M

Scale: As Noted — Date: Sept. 2021

SHEET No. SB3.1 OF 5 SHEETS

ORIGINAL PLAN	SURVEY PLOTTED BY	DATE
	DRAWN BY	
NOTE BOOK	TRACED BY	
	DESIGNED BY	
No.	QUANTITIES BY	
	CHECKED BY	

DRAWING NAME: Z:\OD ORIGINAL\20-040.8-CRITICAL RPR WAILUKU-HAKALAU-NANUE\01 CAD\09-27-21 COMBINED\HCR-SB0301 HAK CONN DTLS.DWG PLOT TIME: 09-27-21, 12:57 PM)

FED. ROAD DIST. NO.	STATE	PROJ. NO.	FISCAL YEAR	SHEET NO.	TOTAL SHEETS
HAWAII	HAW.	19HK-01-22M	2022	15	27

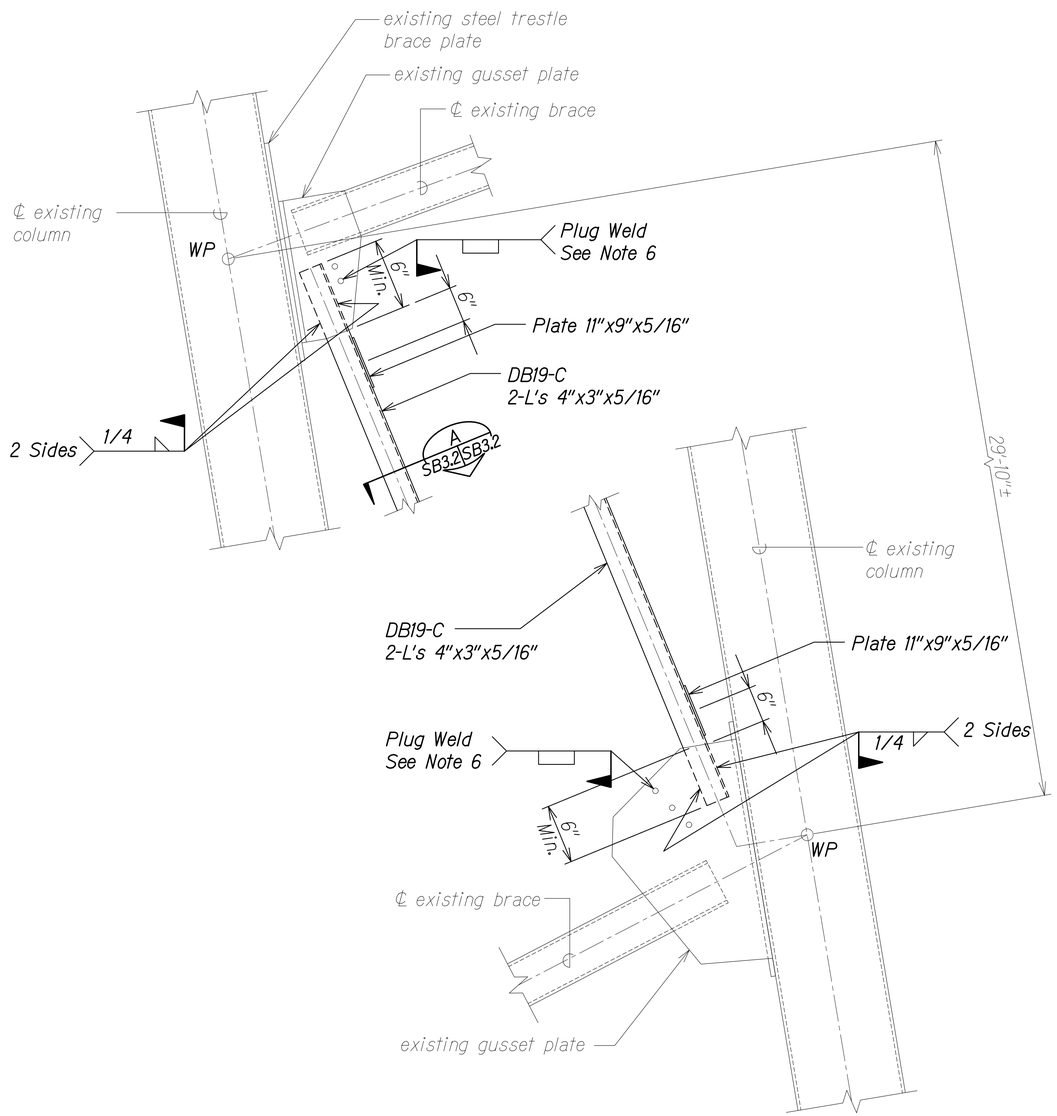

MEMBER DB19-C REPAIR DETAIL

Scale: 1" = 1'-0"

1 SB2.1 SB3.2

SB2.2

Notes:

1. Contractor to verify dimensions. See Structural General Notes Sht. SB0.1, Note 4.D.
2. Contractor shall inspect existing gusset plate. If the structural integrity of the gusset plate is in question or welding to the gusset plate is not possible, the Engineer shall be immediately notified.
3. The Engineer will determine if the gusset plate is reusable or if a doubler plate is required. As applicable, weld doubler plate to exterior face of gusset plate. For doubler plate detail, see Sht. SB3.5.
4. Contractor shall install all necessary temporary bracing prior to removal of existing members. See Structural General Notes, Sht. SB0.1 Note 4.C.
5. Grind welds off of backside of gusset plate after removal of diagonal members. Remove any bolts or rivets.
6. Clean surfaces of existing gusset plate of paint, rust, and scale. Follow paint manufacturer's requirements for surface preparation. Plug weld all unused holes in gusset plate.
7. Fabricate new diagonal brace member DB19-C. Contractor to determine lengths of new members. Shop paint diagonal brace member. Hold paint 6" back from edge of gusset plate.
8. Install new diagonal brace member. Note: Temporary holes for erection bolts may be installed at Contractor's option. After member is installed, temporary erection bolt holes shall be plug welded.
9. Weld new diagonal member to inside face of gusset plate.
10. Field apply specified paint system to all unpainted and clean surfaces of diagonal brace member and gusset plates.

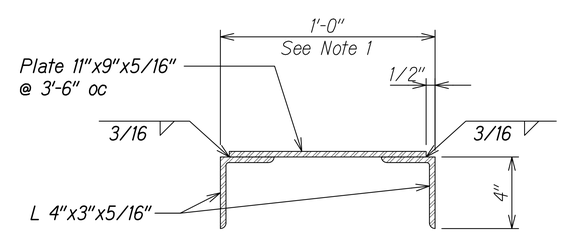

DB19-C SECTION

Scale: 3" = 1'-0"

A SB3.2 SB3.2

STEPHEN T. PETERS
LICENSED PROFESSIONAL ENGINEER
NO. 17097-S
HAWAII, U.S.A.

THIS WORK WAS PREPARED BY ME OR UNDER MY SUPERVISION.

SIGNATURE EXPIRATION DATE OF THE LICENSE

STATE OF HAWAI'I
DEPARTMENT OF TRANSPORTATION
HIGHWAYS DIVISION

HAKALAU STREAM BRIDGE
SECTION AND DETAIL

HAWAII BELT ROAD
HAMAKUA COAST BRIDGE REPAIRS
(WAILUKU, HAKALAU AND NANUE STREAM BRIDGES)

Project No. 19HK-01-22M

Scale: As Noted Date: Sept. 2021

SHEET No. SB3.2 OF 5 SHEETS

ORIGINAL PLAN | SURVEY PLOTTED BY | DRAWN BY | TRACED BY | DESIGNED BY | QUANTITIES BY | CHECKED BY | DATE | NOTE BOOK No.

DRAWING NAME: Z:\00 ONGOING\20-040-B-CRITICAL RPR WAILUKU-HAKALAU-NANUE\01 CAD\09-27-21 COMBINED\HCR-SB0301 HAK CONN DTLS.DWG PLOT TIME: 09-27-21, 12:58 PM)

FED. ROAD DIST. NO.	STATE	PROJ. NO.	FISCAL YEAR	SHEET NO.	TOTAL SHEETS
HAWAII	HAW.	19HK-01-22M	2022	16	27

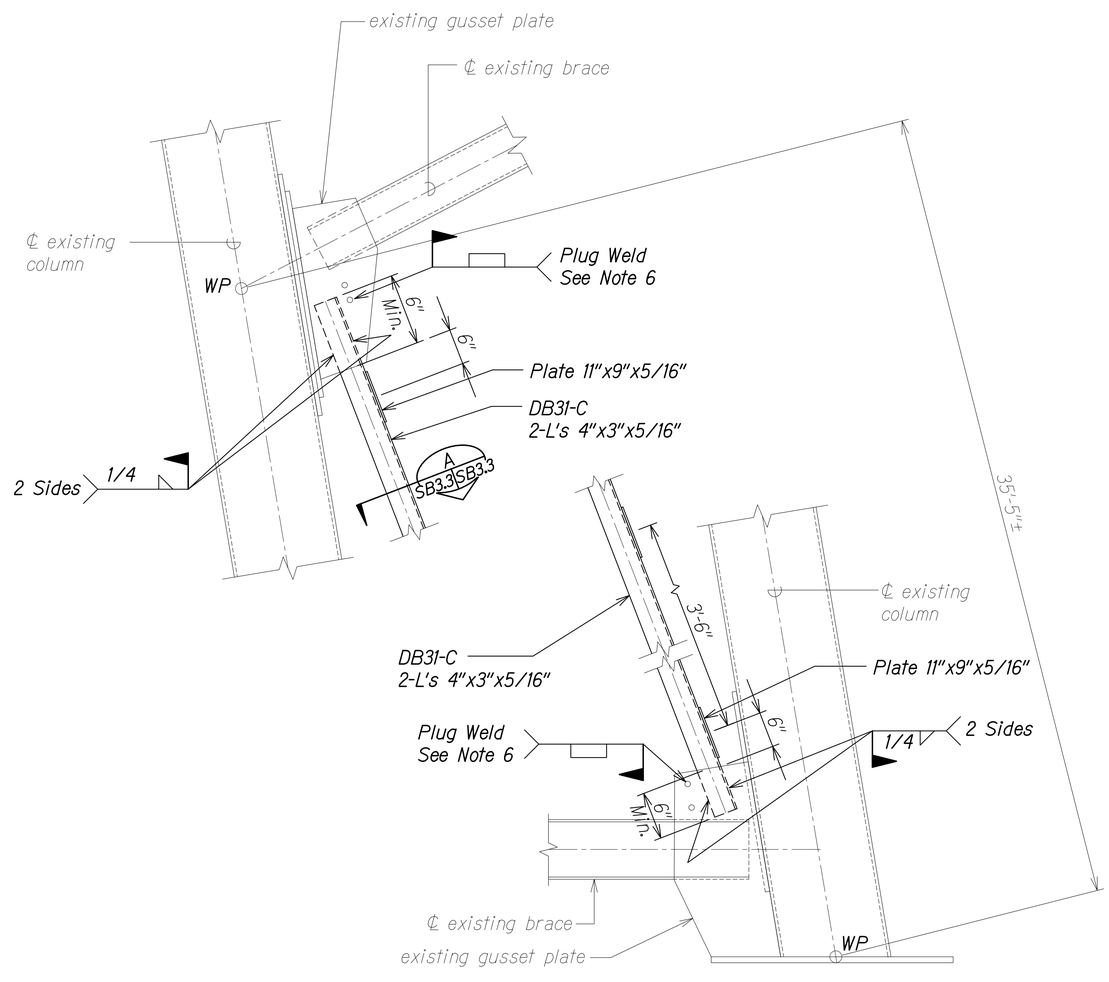

MEMBER DB31-C REPAIR DETAIL

1 SB2.2 SB3.3

Scale: 1" = 1'-0"

Notes:

1. Contractor to verify dimensions. See Structural General Notes Sht. SB0.1, Note 4.D.
2. Contractor shall inspect existing gusset plate. If the structural integrity of the gusset plate is in question or welding to the gusset plate is not possible, the Engineer shall be immediately notified.
3. The Engineer will determine if the gusset plate is reusable or if a doubler plate is required. As applicable, weld doubler plate to exterior face of gusset plate. For doubler plate detail, see Sht. SB3.5.
4. Contractor shall install all necessary temporary bracing prior to removal of existing members. See Structural General Notes, Sht. SB0.1 Note 4.C.
5. Grind welds off of backside of gusset plate after removal of diagonal members. Remove any bolts or rivets.
6. Clean surfaces of existing gusset plate of paint, rust, and scale. Follow paint manufacturer's requirements for surface preparation. Plug weld all unused holes in gusset plate.
7. Fabricate new diagonal brace member DB31-C. Contractor to determine lengths of new members. Shop paint diagonal brace member. Hold paint 6" back from edge of gusset plate.
8. Install new diagonal brace member. Note: Temporary holes for erection bolts may be installed at Contractor's option. After member is installed, temporary erection bolt holes shall be plug welded.
9. Weld new diagonal member to inside face of gusset plate.
10. Field apply specified paint system to all unpainted and clean surfaces of diagonal brace member and gusset plates.

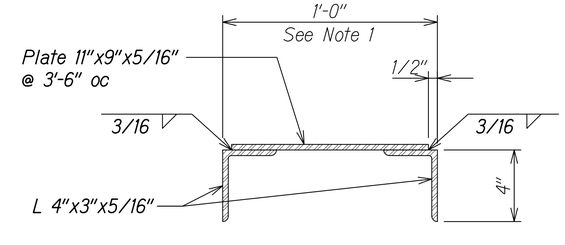

DB31-C SECTION

A SB3.3 SB3.3

Scale: 3" = 1'-0"

STEPHEN T. PETERS
LICENSED PROFESSIONAL ENGINEER
NO. 17097-S
HAWAII, U.S.A.

THIS WORK WAS PREPARED BY ME OR UNDER MY SUPERVISION.

SIGNATURE EXPIRATION DATE OF THE LICENSE

STATE OF HAWAI'I
DEPARTMENT OF TRANSPORTATION
HIGHWAYS DIVISION

HAKALAU STREAM BRIDGE SECTION AND DETAIL

HAWAII BELT ROAD
HAMAKUA COAST BRIDGE REPAIRS
(WAILUKU, HAKALAU AND NANUE STREAM BRIDGES)

Project No. 19HK-01-22M

Scale: As Noted Date: Sept. 2021

SHEET No. SB3.3 OF 5 SHEETS

ORIGINAL PLAN | SURVEY PLOTTED BY | DRAWN BY | TRACED BY | DESIGNED BY | QUANTITIES BY | CHECKED BY | DATE
NOTE BOOK No.

BRAKING NAME: ZA:\OD ONGOING\20-640.B-CRITICAL PRR WAILUKU-HAKALAU-NANUE\01 CADD\09-27-21 COMBINED\HCR-SB0301 HAK CONN DTLS.DWG PLOT TIME: 09-27-21, 12:59 PM

FED. ROAD DIST. NO.	STATE	PROJ. NO.	FISCAL YEAR	SHEET NO.	TOTAL SHEETS
HAWAII	HAW.	19HK-01-22M	2022	17	27

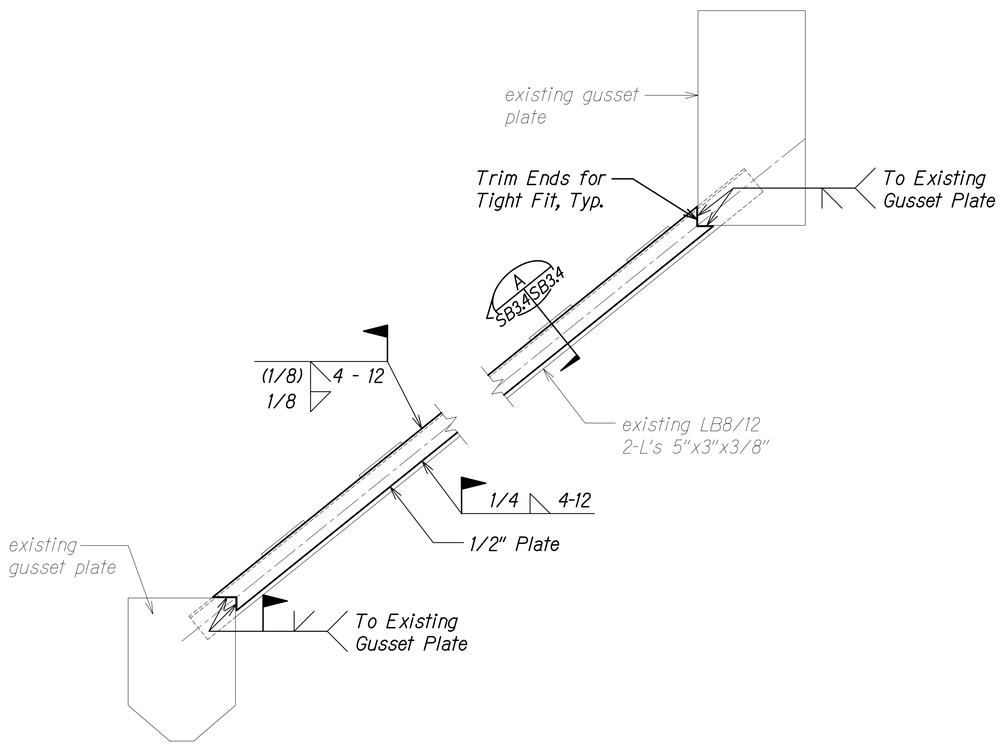

MEMBER LB8/12 REPAIR DETAIL (1 SB2.1 SB3.4 / SB2.2)

Scale: 1" = 1'-0"

Notes:

1. Contractor to verify dimensions. See Structural General Notes Sht. SB0.1, Note 4.D.
2. Remove any existing steel plate patch repairs covering corrosion holes. Clean surfaces of existing member LB8/12 of existing paint, rust and scale. Follow paint manufacturer's requirements for surface preparation.
3. Install and weld new cover plate to exterior face of downstream angle leg.
   Note: Welding shall be done in a manner that does not warp plates or angle. Plate shall be welded to sound base material.
4. Field apply specified paint system to all unpainted and cleaned surfaces.

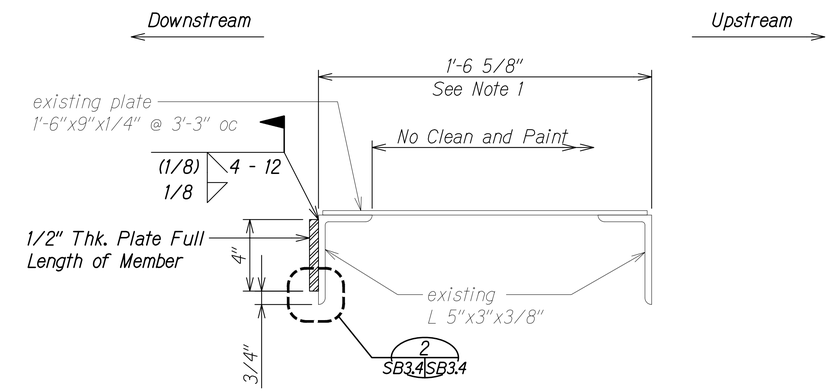

MEMBER LB8/12 REPAIR SECTION (A SB3.4 SB3.4)

Scale: 3" = 1'-0"

Note:

Weld detail at bottom of angle vertical leg depends on existing condition and level of corrosion.

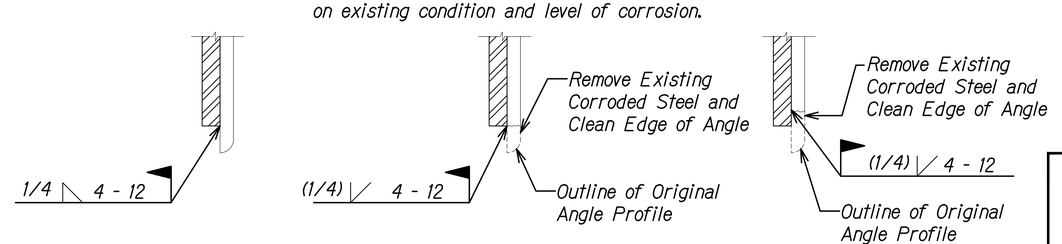

MINIMAL CORROSION MODERATE CORROSION SEVERE CORROSION

DETAIL (2 SB3.4 SB3.4)

Scale: 6" = 1'-0"

STEPHEN T. PETERS
LICENSED PROFESSIONAL ENGINEER
NO. 17097-S
HAWAII, U.S.A.

THIS WORK WAS PREPARED BY ME OR UNDER MY SUPERVISION.

SIGNATURE EXPIRATION DATE OF THE LICENSE

STATE OF HAWAI'I
DEPARTMENT OF TRANSPORTATION
HIGHWAYS DIVISION

HAKALAU STREAM BRIDGE
SECTION AND DETAIL

HAWAII BELT ROAD
HAMAKUA COAST BRIDGE REPAIRS
(WAILUKU, HAKALAU AND NANUE STREAM BRIDGES)
Project No. 19HK-01-22M

Scale: As Noted Date: Sept. 2021

SHEET No. SB3.4 OF 5 SHEETS

ORIGINAL PLAN	SURVEY PLOTTED BY	DATE
	DRAWN BY	" " " "
NOTE BOOK	TRACED BY	
	DESIGNED BY	
No.	QUANTITIES BY	
	CHECKED BY	

DRAWING NAME: Z:\OD ONGOING\20-040.8-CRITICAL RPR WAILUKU-HAKALAU-NANUE\01 CAD\09-28-21 REVISED TITLE SHEET\HCR-SB0301 HAK CONN DTLS.DWG PLOT TIME: 09-28-21 4:16 PM

FED. ROAD DIST. NO.	STATE	PROJ. NO.	FISCAL YEAR	SHEET NO.	TOTAL SHEETS
HAWAII	HAW.	19HK-01-22M	2022	18	27

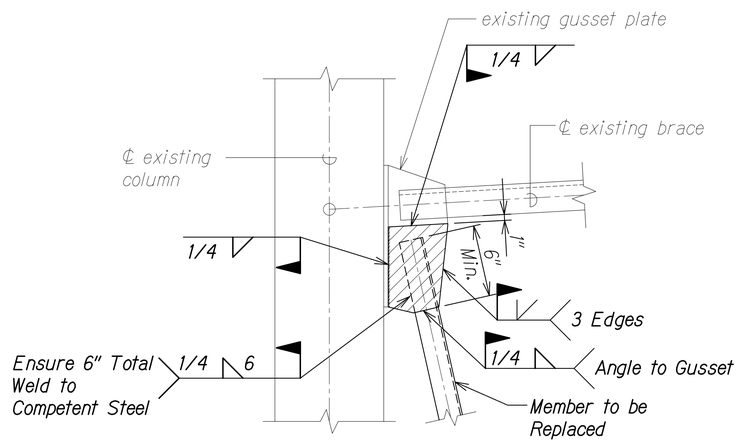

DOUBLER PLATE DETAIL

1
SB3.5 | SB3.5

Scale: 1" = 1'-0"

Legend:

3/8" Thick Doubler Plate Welded to Exterior Face of Existing Gusset Plate

Notes:

1. Doubler plate detail shows the limits of a potential added doubler plate.
2. Doubler plate shall be added at gusset plate locations that have areas of more than 25 percent section loss. See Detail 1/SB3.5
3. Contractor shall perform inspection of existing gusset plates to determine condition and applicability of doubler plate with approval from the Engineer. If required, work shall be paid for under Item 501.2200 - Doubler Plates - Hakalau Bridge.
4. Contractor shall determine necessary dimensions of the double plate based on in-field measurements of the existing gusset plate to match.

STEPHEN T. PETERS
LICENSED PROFESSIONAL ENGINEER
NO. 17097-S
HAWAII, U.S.A.

THIS WORK WAS PREPARED BY ME OR UNDER MY SUPERVISION.

SIGNATURE EXPIRATION DATE OF THE LICENSE

STATE OF HAWAI'I
DEPARTMENT OF TRANSPORTATION
HIGHWAYS DIVISION

HAKALAU STREAM BRIDGE DETAIL

HAWAII BELT ROAD
HAMAKUA COAST BRIDGE REPAIRS
(WAILUKU, HAKALAU AND NANUE STREAM BRIDGES)
Project No. 19HK-01-22M

Scale: As Noted Date: Sept. 2021

SHEET No. SB3.5 OF 5 SHEETS

ORIGINAL PLAN	SURVEY PLOTTED BY	DATE
	DRAWN BY	"
NOTE BOOK	TRACED BY	"
	DESIGNED BY	"
No.	QUANTITIES BY	"
	CHECKED BY	"

DRAWING NAME: Z:\OD ONGOING\20-040.8-CRITICAL RPR WAILUKU-HAKALAU-NANUE\01 CAD\09-22-21 COMBINED\HBR-SB0301 HAK CONN DTLS.DWG PLOT TIME: 09-27-21, 1:01 PM

FED. ROAD DIST. NO.	STATE	PROJ. NO.	FISCAL YEAR	SHEET NO.	TOTAL SHEETS
HAWAII	HAW.	19HK-01-22M	2022	19	27

STRUCTURAL GENERAL NOTES

1. General Specifications: Hawaii Department of Transportation (HDOT), "Standard Specifications for Road and Bridge Construction", 2005, together with Special Provisions prepared for this contract.

2. Design Specifications:

   A. American Association of State Highway and Transportation Officials (AASHTO) 2020 "LRFD Bridge Design Specifications" (Ninth Edition) and its subsequent interim specifications with interim supplements and modifications by the HDOT Highways Division.

   B. HDOT Document "Design Criteria for Bridges and Structures" dated August 8, 2014 and HDOT Memorandum "Changes to Design Criteria for Bridges and Structures" dated January 8, 2018.

3. Materials:

   A. Structural Steel

      (1) All steel shall conform to the following requirements:

      Rolled Steel Shapes

      (a) Channels — ASTM A36

      (b) Angles — ASTM A36

      (c) Plates and All Others — ASTM A36

      (2) All workmanship shall be in accordance with the latest AISC and AWS D1.5.

      (3) All welding, whether shop or field, shall be done by certified welders in conformance with the Bridge Welding Code AWS D1.5 of the American Welding Society. Filler Metal shall have a minimum tensile strength of 70 ksi.

      (4) Field welding to existing steel shall not be permitted unless specifically shown or noted on drawings. See Standard Specifications and Special Provisions for pre-heat and other requirements. Welding shall be performed such that excessive concentrated heat does not warp any new or existing steel pieces being joined.

      (5) Where specified in the contract documents, all steel to steel bolted connections shall be designated as slip-critical. Paint blocking/masking shall be detailed as shown on the plans and the accompanying special provisions. Bolts shall be tightened with the proper amount of pretensioned clamping force.

      (6) All other bolted connections shall be classified as pre-tensioned connections.

      (7) All bolt assemblies which connect steel to steel shall be TnA 144 - Type 1 Grade 144 Torque-and-Angle Fixed-Spline Structural bolt assembly manufactured in accordance with ASTM F3148, unless otherwise noted. Nuts shall conform to ASTM A563 and washers shall conform to ASTM F436. All nuts shall be lubricated with Clean Lube, acrylic latex-based lubricant in accordance with ASTM A563. Bolt, Nut, and

3. Materials (Cont.):

      (7) Washer Assembly shall be galvanized to a Class 55 thickness in accordance with ASTM B695. Round button head shall be placed on the exterior (visible) face of the connection plate assembly.

      (8) All bolt assemblies shall be touch-up field painted with the specified paint system after assembly.

      (9) See Special Provisions Section 501 for structural steel requirements. All holes shall be prepunched before shop priming and coating steel. Touch-up paint steel in field.

      (10) See Special Provisions Section 697 for painting requirements Shop and field applied paint shall be a 3-coat paint system (zinc primer, epoxy intermediate, and polyurethane topcoat).

      (11) Paint color shall match the color of the existing surrounding bridge members. Paint sheen shall be gloss and color scheme shall be submitted to the Engineer for review and approval.

4. Construction Notes:

   A. Install protective devices to prevent all construction debris and fugitive dust from entering the river and banks. The Contractor shall submit working drawings for the protective devices to the Engineer for approval. Any work involving these protective devices shall be paid for under Item 209.1200 - Installation, Maintenance, Monitoring, and Removal of BMP and Work Platform - Nanue Bridge. Work shall not begin until the Engineer approves the proposed system.

   B. The Contractor is prohibited from accessing the ground or water under the bridge. This includes the entire area under the bridge within the State Right of Way. All access to the repair sites shall be from the top of the bridge or from a temporary work platform. Work Platform shall be paid for under Item 209.1200 - Installation, Maintenance, Monitoring, and Removal of BMP and Work Platform - Nanue Bridge. There are high contaminants of lead in the soil below the bridge and any contact with the ground is prohibited.

   C. The Contractor shall be entirely responsible for the stability of the bridge and integrity of the members during construction. The addition of temporary bracing prior to the removal and replacement of bridge elements shall be anticipated. At a minimum, the temporary bracing shall have equal or greater strength and stiffness than the member it is replacing. The temporary bracing plan and calculations, stamped by a Structural Engineer, licensed in the State of Hawaii, shall be submitted to the Engineer for review and approval prior to any work being performed.

   D. The Contractor shall field verify all existing conditions, dimensions, and member sizes prior to fabrication of any bridge elements. The Engineer shall be notified immediately regarding any change of conditions or discrepancies between the plans and field investigation.

4. Construction Notes (Cont.):

   E. The structural repair details shown on the plans are based on the Engineer's findings during the latest site investigation. If existing bridge members that are to remain, have deteriorated such they cannot be bolted or welded to, the Engineer shall be notified immediately.

   F. Work platform drawings and calculations, stamped by a Professional Structural Engineer, licensed in the State of Hawaii, shall be submitted to the Engineer for review and approval. Calculations shall include a structural assessment of all bridge components that support any portion of the work platform.

   G. Work platform shall be designed for the actual weights of required construction equipment and material plus the intended design Live Load but not to be less than a minimum uniform 20 pounds per square foot Live Load plus 75 pounds per linear foot Live Load applied at all cantilever edge overhangs. Design for lateral loads in conformance with Section 22 of the AASHTO "Guide Design Specifications for Bridge Temporary Works".

   H. At locations where existing rivets are to be replaced with new High-Strength bolts, new bolt sizes shall match the diameter of the rivets they replace.

   I. The Contractor shall examine existing hole conditions after rivet removal. If necessary, hole shall be over-reamed 1/8" larger than existing hole diameter and a bolt 1/8" larger in diameter shall be used. Additional work, if necessary, shall be paid for under Section 501 - Oversized Hardware - Nanue Bridge.

   J. The Contractor shall coordinate all traffic control and lane closure requirements with the State DOT Highways Division. The Contractor shall notify the State a minimum of 11 days prior to any requests for traffic control or lane closures. Lane closures may be scheduled on weekdays from 8:30 AM to 3:00 PM.

   K. The Contractor shall be aware that some tree trimming work may be required for necessary bridge repairs. Cost for tree trimming work shall be considered incidental to the bridge repair work

   L. The Contractor shall be responsible for the cost of all high strength bolting and welding inspection, including any non-destructive testing. Cost shall be incidental to the repair work. Reports shall be submitted to the Engineer for review and approval. All deficient work shall be corrected with no increase in cost to the State.

   M. The Contractor may obtain for review available As-Built drawings of the existing structure from the HDOT Highways Division, Design Branch located at Kakuhihewa Building, Room 609, 601 Kamokila Boulevard, Kapolei, HI 96707.

STEPHEN T. PETERS
LICENSED PROFESSIONAL ENGINEER
NO. 17097-S
HAWAII, U.S.A.

THIS WORK WAS PREPARED BY ME OR UNDER MY SUPERVISION.

SIGNATURE — EXPIRATION DATE OF THE LICENSE 4-30-22

STATE OF HAWAI'I
DEPARTMENT OF TRANSPORTATION
HIGHWAYS DIVISION

NANUE STREAM BRIDGE
STRUCTURAL GENERAL NOTES
HAWAII BELT ROAD
HAMAKUA COAST BRIDGE REPAIRS
(WAILUKU, HAKALAU AND NANUE STREAM BRIDGES)
Project No. 19HK-01-22M
Scale: None — Date: Sept. 2021

SHEET No. SC0.1 OF 1 SHEETS

ORIGINAL PLAN | SURVEY PLOTTED BY | DRAWN BY | TRACED BY | DESIGNED BY | QUANTITIES BY | CHECKED BY | DATE
NOTE BOOK No.

DRAWING NAME: Z:\JOB ONGOING\20-040.B-CRITICAL REPR WAILUKU-HAKALAU-NANUE\01 CADD\09-28-21 REVISED TITLE SHEET\HDR-SC0001 MAN GENNOTES.DWG PLOT TIME: 09-28-21, 4:17 PM

FED. ROAD DIST. NO.	STATE	PROJ. NO.	FISCAL YEAR	SHEET NO.	TOTAL SHEETS
HAWAII	HAW.	19HK-01-22M	2022	20	27

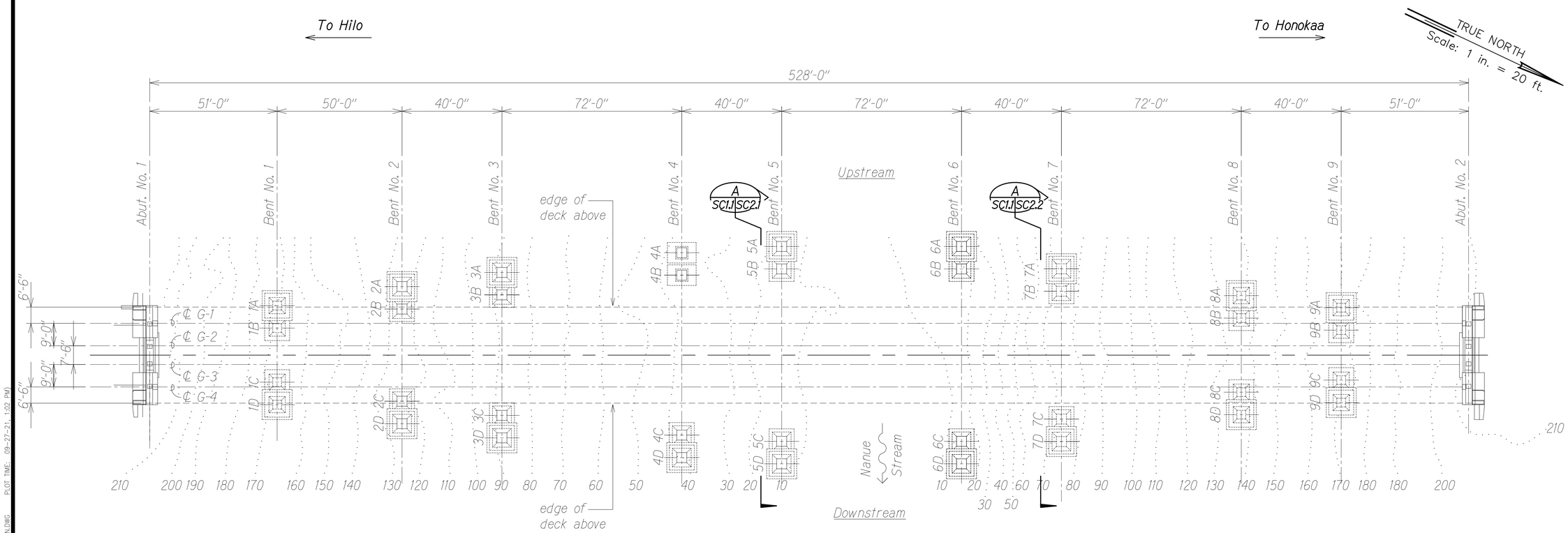

LAYOUT PLAN

Scale: 1" = 20'-0"

STEPHEN T. PETERS
LICENSED PROFESSIONAL ENGINEER
NO. 17097-S
HAWAII, U.S.A.

THIS WORK WAS PREPARED BY ME OR UNDER MY SUPERVISION.

SIGNATURE — EXPIRATION DATE OF THE LICENSE

STATE OF HAWAI'I
DEPARTMENT OF TRANSPORTATION
HIGHWAYS DIVISION

NANUE STREAM BRIDGE

LAYOUT PLAN

HAWAII BELT ROAD
HAMAKUA COAST BRIDGE REPAIRS
(WAILUKU, HAKALAU AND NANUE STREAM BRIDGES)
Project No. 19HK-01-22M

Scale: As Noted — Date: Sept. 2021

SHEET No. SC1.1 OF 2 SHEETS

ORIGINAL PLAN	SURVEY PLOTTED BY	DATE
	DRAWN BY	" " " "
NOTE BOOK	TRACED BY	
	DESIGNED BY	
	QUANTITIES BY	
No.	CHECKED BY	

DRAWING NAME: Z:\JOB ONGOING\20-640.8-CRITICAL RPR WAILIKU-HAKALAU-NANUE\01 CAD\09-27-21 COMBINED\HCR-SC20101 NAN PLAN.DWG PLOT TIME: 09-27-21, 1:02 PM

FED. ROAD DIST. NO.	STATE	PROJ. NO.	FISCAL YEAR	SHEET NO.	TOTAL SHEETS
HAWAII	HAW.	19HK-01-22M	2022	21	27

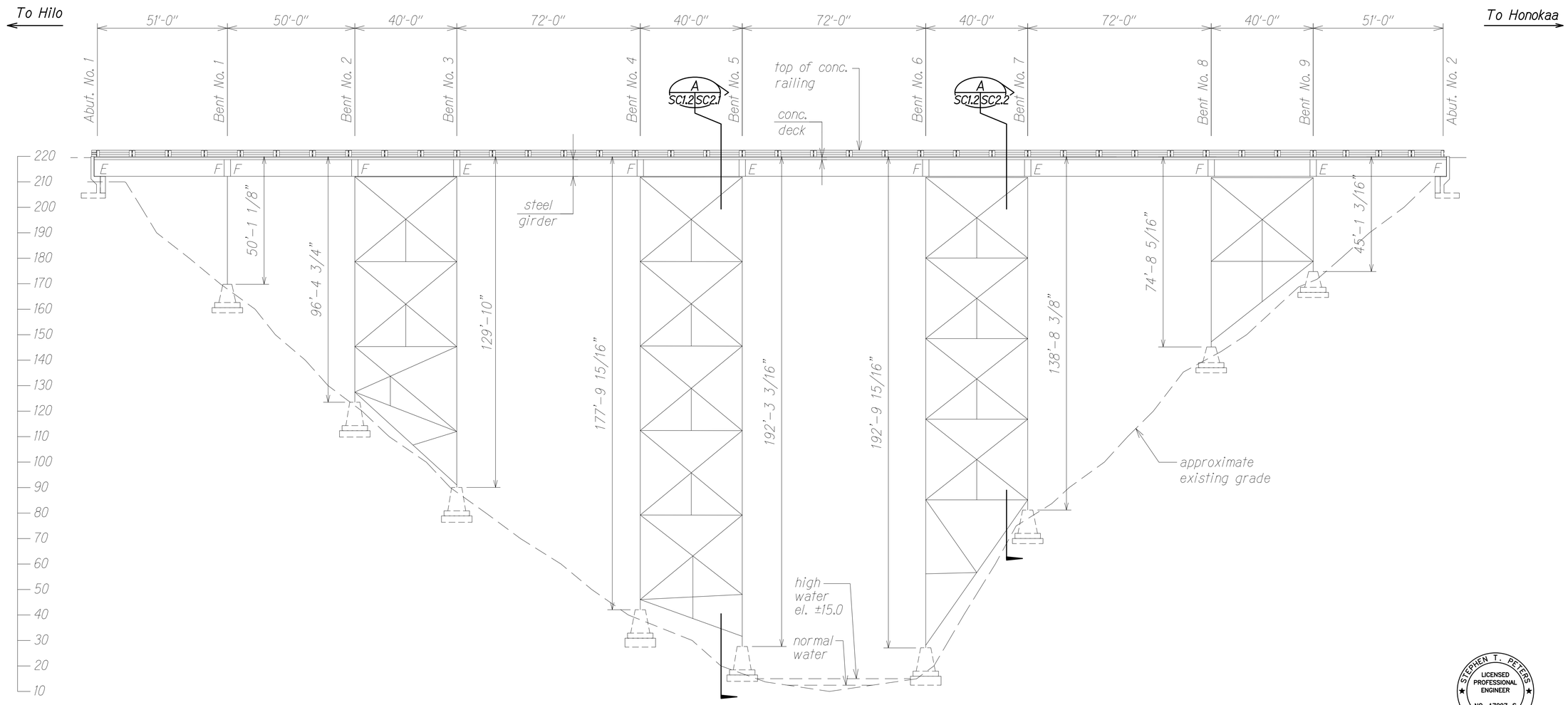

Legend:

F Fixed Bearing

E Expansion Bearing

ELEVATION

Scale: 1" = 20'-0"

ORIGINAL PLAN	SURVEY PLOTTED BY	DATE
	DRAWN BY	"
NOTE BOOK	TRACED BY	"
	DESIGNED BY	"
No.	QUANTITIES BY	"
	CHECKED BY	"

DRAWING NAME: Z:\OD ONGOING\20-040.8-CRITICAL RPR WAILUKU-HAKALAU-NANUE\01 CAD\09-27-21 COMBINED\HCR-SCS0101 NAN PLAN.DWG PLOT TIME: 09-27-21, 1:03 PM)

STEPHEN T. PETERS
LICENSED PROFESSIONAL ENGINEER
NO. 17097-S
HAWAII, U.S.A.

THIS WORK WAS PREPARED BY ME OR UNDER MY SUPERVISION.

SIGNATURE EXPIRATION DATE OF THE LICENSE

STATE OF HAWAI'I
DEPARTMENT OF TRANSPORTATION
HIGHWAYS DIVISION

NANUE STREAM BRIDGE
ELEVATION

HAWAII BELT ROAD
HAMAKUA COAST BRIDGE REPAIRS
(WAILUKU, HAKALAU AND NANUE STREAM BRIDGES)
Project No. 19HK-01-22M

Scale: As Noted Date: Sept. 2021

SHEET No. SC1.2 OF 2 SHEETS

FED. ROAD DIST. NO.	STATE	PROJ. NO.	FISCAL YEAR	SHEET NO.	TOTAL SHEETS
HAWAII	HAW.	19HK-01-22M	2022	22	27

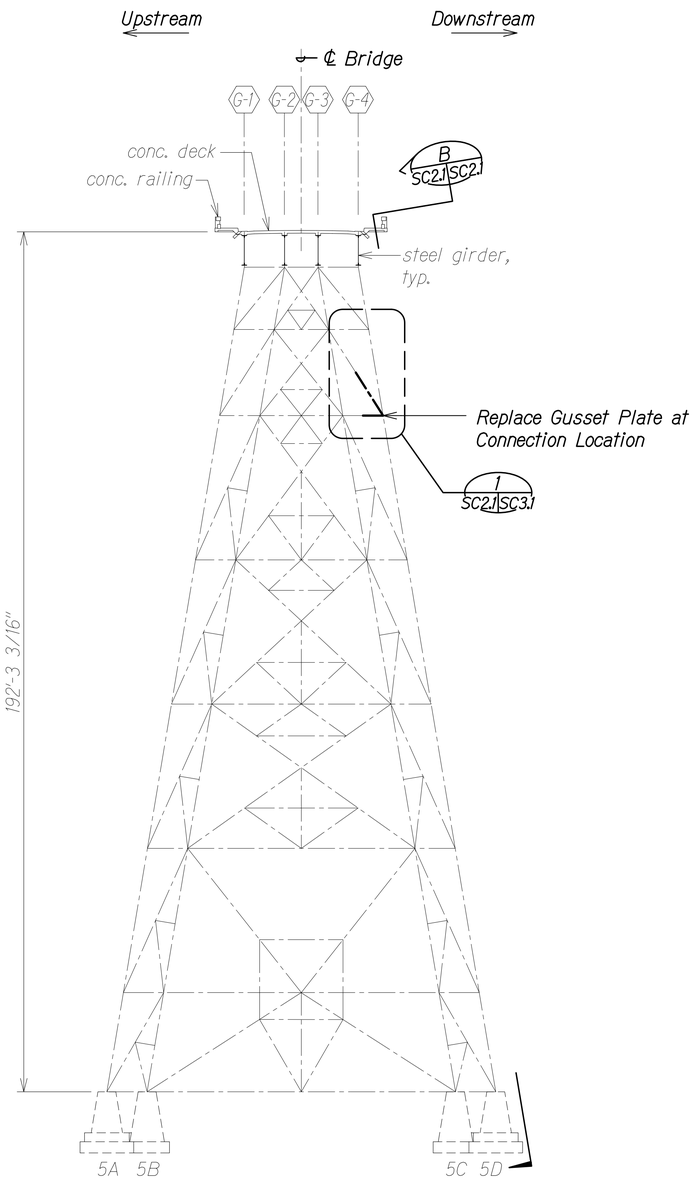

BENT NO. 5 SECTION ELEVATION
LOOKING TOWARD HONOKA'A
Scale: 1/16" = 1'-0"

A
SC1.1 SC2.1
SC1.2, SC2.1

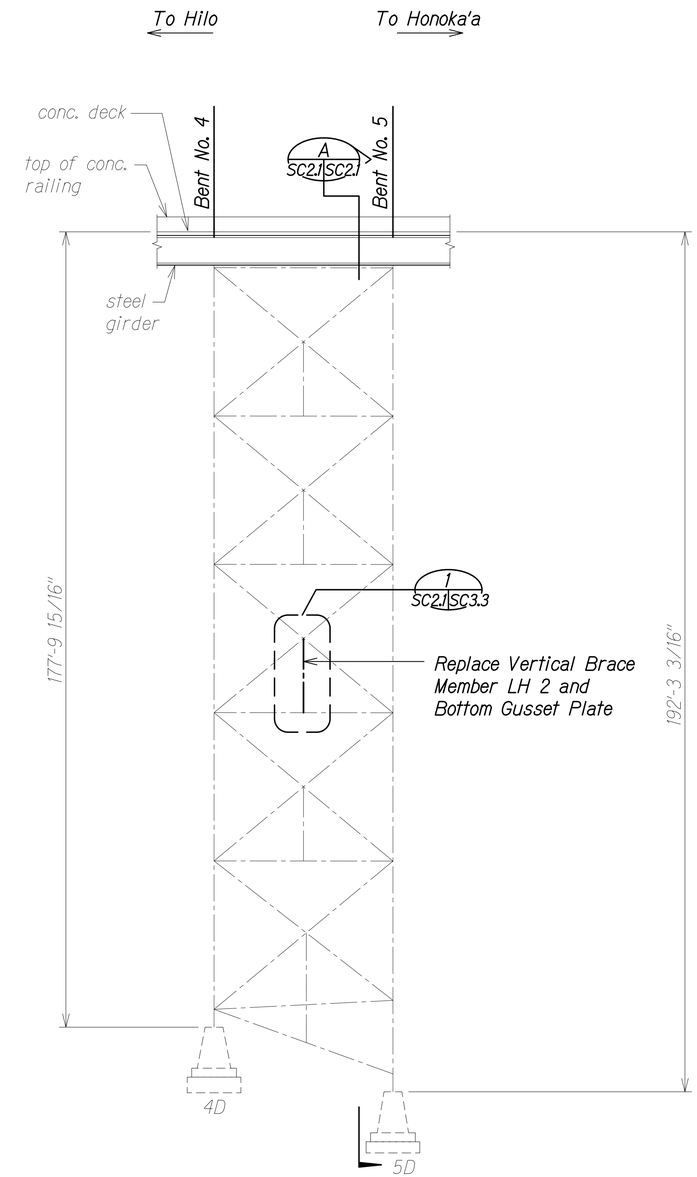

BENT NOS. 4 AND 5 SECTION ELEVATION
EXTERIOR DOWNSTREAM FACE
Scale: 1/16" = 1'-0"

B
SC2.1 SC2.1

STEPHEN T. PETERS
LICENSED PROFESSIONAL ENGINEER
NO. 17097-S
HAWAII, U.S.A.

THIS WORK WAS PREPARED BY ME OR UNDER MY SUPERVISION.

SIGNATURE EXPIRATION DATE OF THE LICENSE

STATE OF HAWAI'I
DEPARTMENT OF TRANSPORTATION
HIGHWAYS DIVISION

NANUE STREAM BRIDGE SECT.
ELEVS. - BENT NOS. 4 AND 5

HAWAII BELT ROAD
HAMAKUA COAST BRIDGE REPAIRS
(WAILUKU, HAKALAU AND NANUE STREAM BRIDGES)
Project No. 19HK-01-22M
Scale: As Noted Date: Sept. 2021

SHEET No. SC2.1 OF 2 SHEETS

ORIGINAL PLAN
NOTE BOOK No.
SURVEY PLOTTED BY
DRAWN BY
TRACED BY
DESIGNED BY
QUANTITIES BY
CHECKED BY
DATE

DRAWING NAME: Z:\JOB ONGOING\20-040.8-CRITICAL RPR WAILUKU-HAKALAU-NANUE\01 CAD\09-27-21 COMBINED\HCR-SCS0201 NAN BENTS.DWG PLOT TIME 09-27-21, 1:04 PM

FED. ROAD DIST. NO.	STATE	PROJ. NO.	FISCAL YEAR	SHEET NO.	TOTAL SHEETS
HAWAII	HAW.	19HK-01-22M	2022	23	27

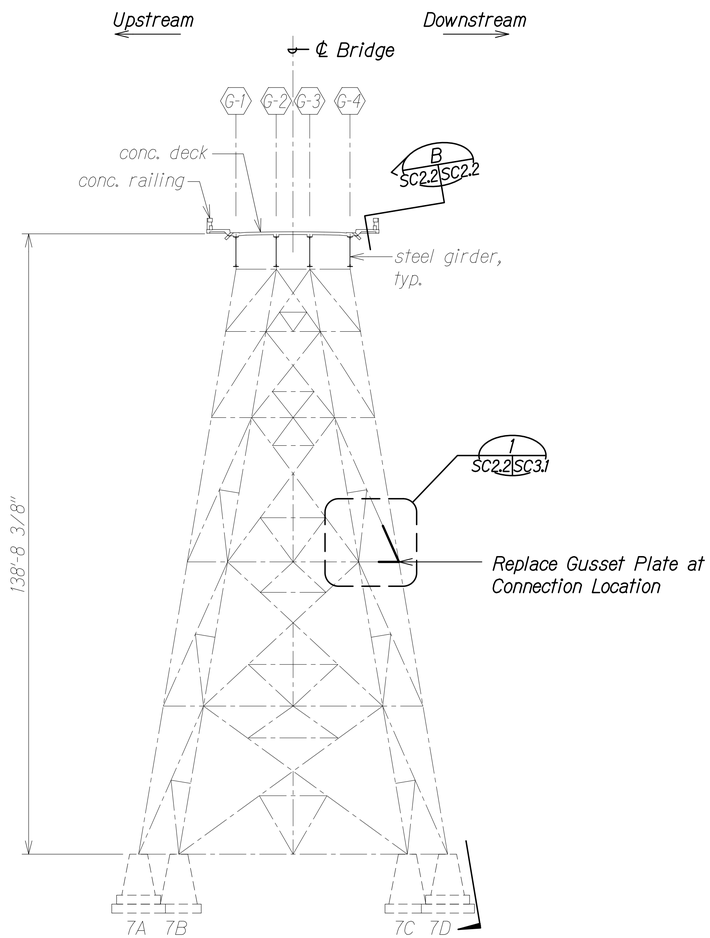

BENT NO. 7 SECTION ELEVATION
LOOKING TOWARD HONOKA'A

Scale: 1/16" = 1'-0"

A
SC1.1 SC2.2

SC1.2, SC2.1

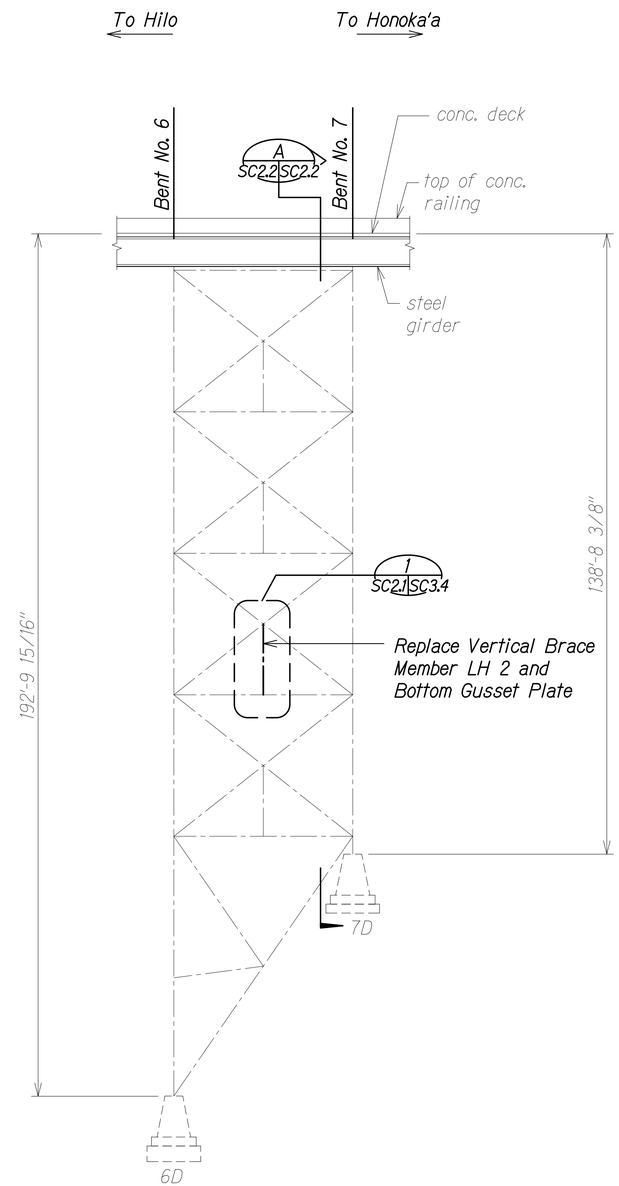

BENT NOS. 6 AND 7 SECTION ELEVATION
EXTERIOR DOWNSTREAM FACE

Scale: 1/16" = 1'-0"

B
SC2.2 SC2.2

STEPHEN T. PETERS
LICENSED PROFESSIONAL ENGINEER
NO. 17097-S
HAWAII, U.S.A.

THIS WORK WAS PREPARED BY ME OR UNDER MY SUPERVISION.

SIGNATURE EXPIRATION DATE OF THE LICENSE

STATE OF HAWAI'I
DEPARTMENT OF TRANSPORTATION
HIGHWAYS DIVISION

NANUE STREAM BRIDGE SECT.
ELEVS. - BENT NOS. 6 AND 7

HAWAII BELT ROAD
HAMAKUA COAST BRIDGE REPAIRS
(WAILUKU, HAKALAU AND NANUE STREAM BRIDGES)
Project No. 19HK-01-22M

Scale: As Noted Date: Sept. 2021

SHEET No. SC2.2 OF 2 SHEETS

ORIGINAL PLAN	SURVEY PLOTTED BY	DATE
	DRAWN BY	"
	TRACED BY	"
NOTE BOOK	DESIGNED BY	"
	QUANTITIES BY	"
No.	CHECKED BY	"

DRAWING NAME: Z:\OD ONGOING\20-040.8-CRITICAL RPR WAILUKU-HAKALAU-NANUE\01 CAD\09-22-21 COMBINED\HDR-SC2\2201 NAN BENTS.DWG PLOT TIME: 09-27-21, 1:04 PM

FED. ROAD DIST. NO.	STATE	PROJ. NO.	FISCAL YEAR	SHEET NO.	TOTAL SHEETS
HAWAII	HAW.	19HK-01-22M	2022	24	27

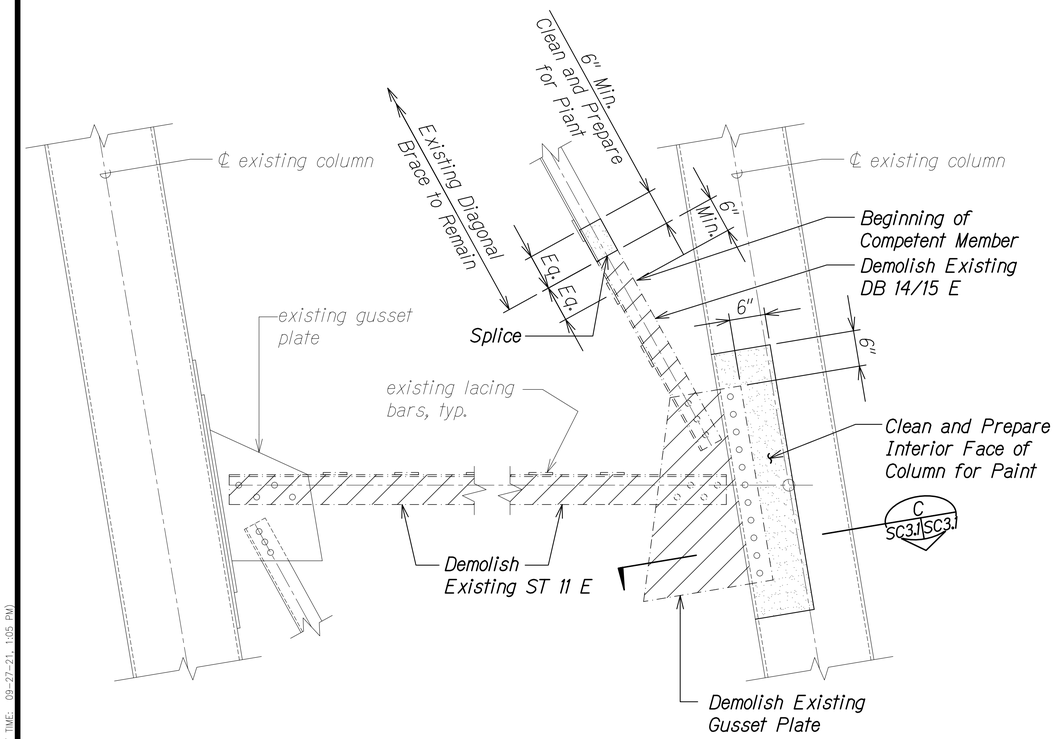

BENTS NOS. 5 AND 7 DIAGONAL BRACE DEMOLITION DETAIL

Scale: 1" = 1'-0"

1 SC2.1 SC3.1

Legend:

= Clean and Prepare for Paint

= Demolition

Notes:

1. Contractor to install all necessary temporary bracing prior to removal of existing members. See Structural General Notes, sheet SC0.1, Note 4.C.
2. Remove gusset plates, existing horizontal member, and portion of existing diagonal member.
3. Splice shall occur 6" into competent member and equal distance from member top and/or bottom transverse bracing plates.
4. Clean and prepare for paint existing column and remaining diagonal member 6" beyond weld splice locations. Follow paint manufacturer's requirements for surface preparation.

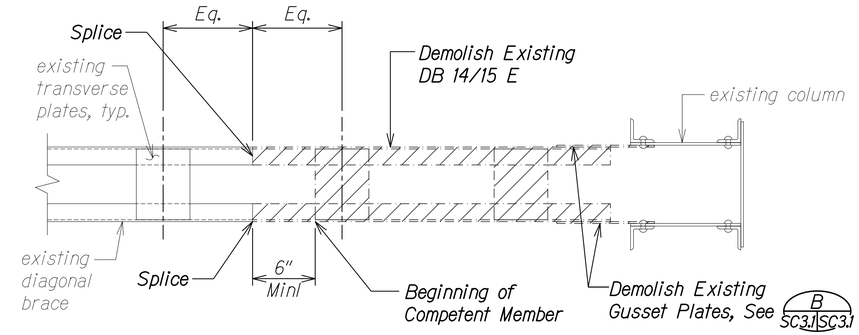

DB 14/15 E DEMOLITION - PLAN

Scale: 1" = 1'-0"

A SC3.1 SC3.1

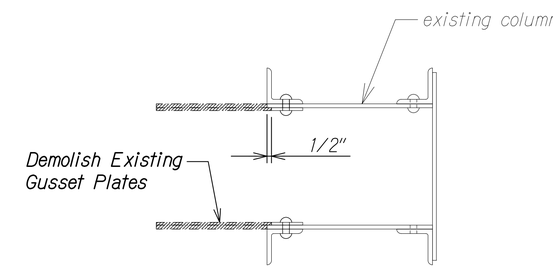

EXISTING GUSSET PLATE DEMOLITION SECTION

Scale: 1 1/2" = 1'-0"

B SC3.1 SC3.1

STEPHEN T. PETERS
LICENSED PROFESSIONAL ENGINEER
NO. 17097-S
HAWAII, U.S.A.

THIS WORK WAS PREPARED BY ME OR UNDER MY SUPERVISION.

SIGNATURE — EXPIRATION DATE OF THE LICENSE

STATE OF HAWAI'I
DEPARTMENT OF TRANSPORTATION
HIGHWAYS DIVISION

NANUE STREAM BRIDGE
DEMOLITION SECTIONS AND DETAILS

HAWAII BELT ROAD
HAMAKUA COAST BRIDGE REPAIRS
(WAILUKU, HAKALAU AND NANUE STREAM BRIDGES)

Project No. 19HK-01-22M

Scale: As Noted — Date: Sept. 2021

SHEET No. SC3.1 OF 4 SHEETS

ORIGINAL PLAN — SURVEY PLOTTED BY / DRAWN BY / TRACED BY / DESIGNED BY / QUANTITIES BY / CHECKED BY — DATE

NOTE BOOK No.

DRAWING NAME: Z:\OD ONGOING\20-040.8-CRITICAL RPR WAILUKU-HAKALAU-NANUE\01 CAD\09-27-21 COMBINED\HCR-SC5030 NAN SECT.DWG PLOT TIME: 09-27-21 1:05 PM

FED. ROAD DIST. NO.	STATE	PROJ. NO.	FISCAL YEAR	SHEET NO.	TOTAL SHEETS
HAWAII	HAW.	19HK-01-22M	2022	25	27

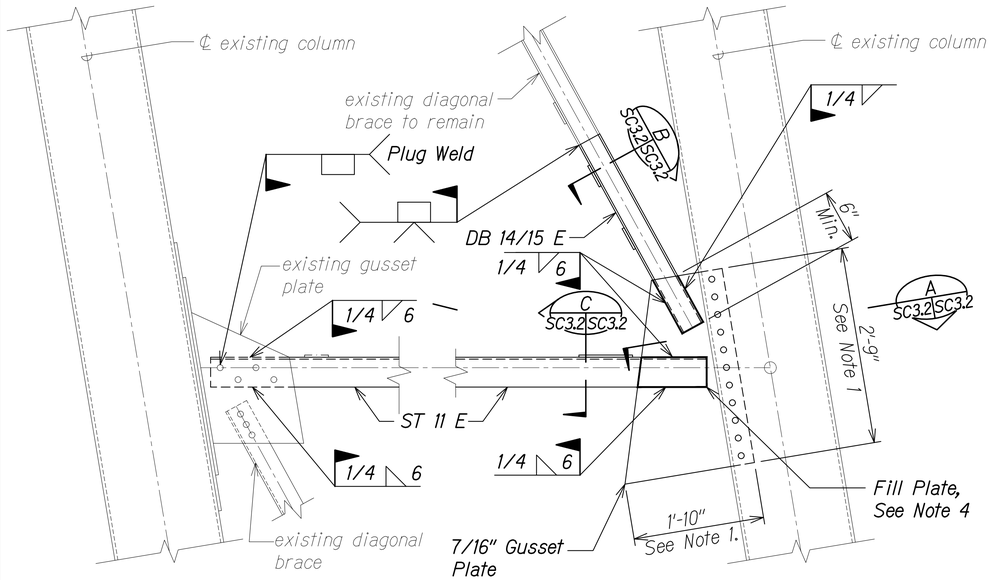

BENTS NOS. 5 AND 7 DIAGONAL BRACE REPAIR DETAIL

Scale: 1" = 1'-0"

1 SC2.1 SC3.2 SC2.2

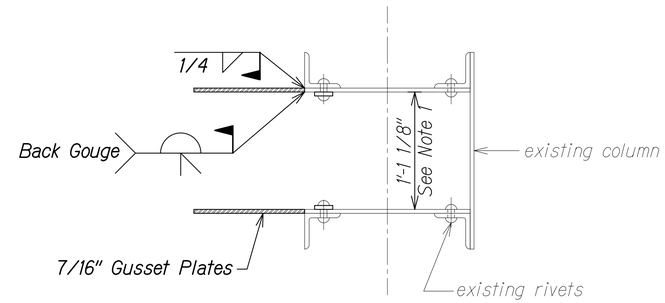

COLUMN - GUSSET PLATE SECTION

Scale: 1 1/2" = 1'-0"

A SC3.2 SC3.2

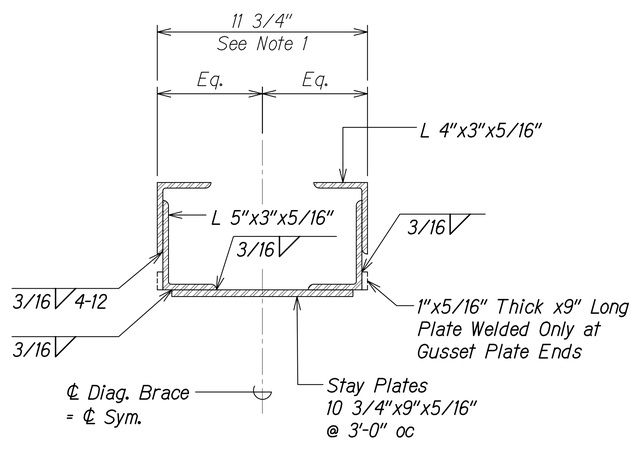

DB 14/15 E SECTION

Scale: 3" = 1'-0"

B SC3.2 SC3.2

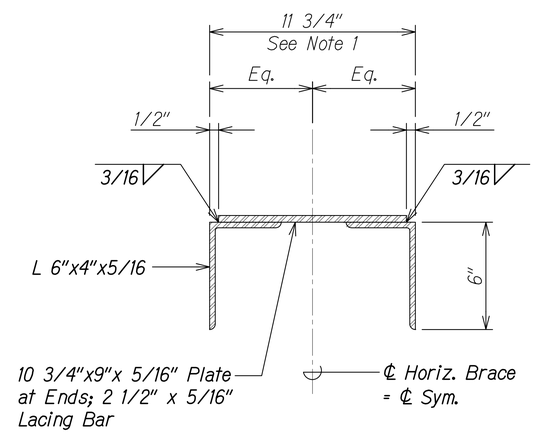

ST 11 E SECTION

Scale: 3" = 1'-0"

C SC3.2 SC3.2

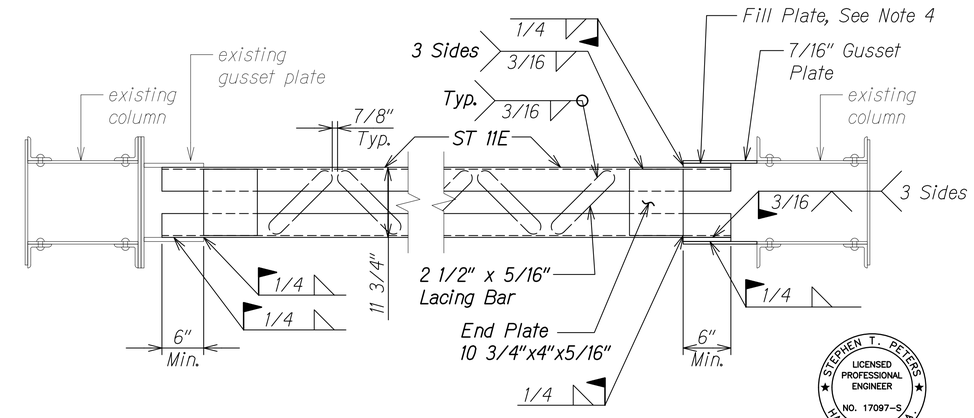

ST 11 E - PLAN

Scale: 1" = 1'-0"

D SC3.2 SC3.2

Notes:

1. Contractor to verify dimensions. See Structural General Notes, Sheet SC0.1, Note 4.D.
2. Contractor to install all necessary temporary bracing prior to removal of existing members. See Structural General Notes, Sheet SC0.1, Note 4.C.
3. Fabricate new gusset plate, diagonal brace DB 14/15E, and horizontal brace ST 11 E. Contractor to determine lengths of new members. Shop paint new members. Hold paint 6" back from ends.
4. A fill plate shall be placed between brace and gusset plate. Weld fill plate to brace and gusset plate. Contractor to determine thickness of fill plate between gusset plate and brace member based on verified field measurements.
5. Install new members.
   Note: Temporary holes for erection bolts may be installed at at Contractor's option. After member is installed, temporary erection bolt holes and existing gusset plate holes shall be plug welded.
6. Field apply specified paint system to all unpainted and clean surfaces of bracing members and gusset plate.

STEPHEN T. PETERS LICENSED PROFESSIONAL ENGINEER NO. 17097-S HAWAII, U.S.A.

THIS WORK WAS PREPARED BY ME OR UNDER MY SUPERVISION.

SIGNATURE — EXPIRATION DATE OF THE LICENSE

STATE OF HAWAI'I
DEPARTMENT OF TRANSPORTATION
HIGHWAYS DIVISION

NANUE STREAM BRIDGE
SECTIONS AND DETAILS

HAWAII BELT ROAD
HAMAKUA COAST BRIDGE REPAIRS
(WAILUKU, HAKALAU AND NANUE STREAM BRIDGES)
Project No. 19HK-01-22M

Scale: As Noted — Date: Sept. 2021

SHEET No. SC3.2 OF 4 SHEETS

ORIGINAL PLAN | SURVEY PLOTTED BY | DRAWN BY | TRACED BY | DESIGNED BY | QUANTITIES BY | CHECKED BY | DATE | NOTE BOOK No.

DRAWING NAME: Z:\OD ONGOING\20-040.B-CRITICAL BPR WAILUKU-HAKALAU-NANUE\01 CAD\09-27-21 COMBINED\HCR-SCS0301 NAN SECT.DWG PLOT TIME: 09-27-21, 1:06 PM

FED. ROAD DIST. NO.	STATE	PROJ. NO.	FISCAL YEAR	SHEET NO.	TOTAL SHEETS
HAWAII	HAW.	19HK-01-22M	2022	26	27

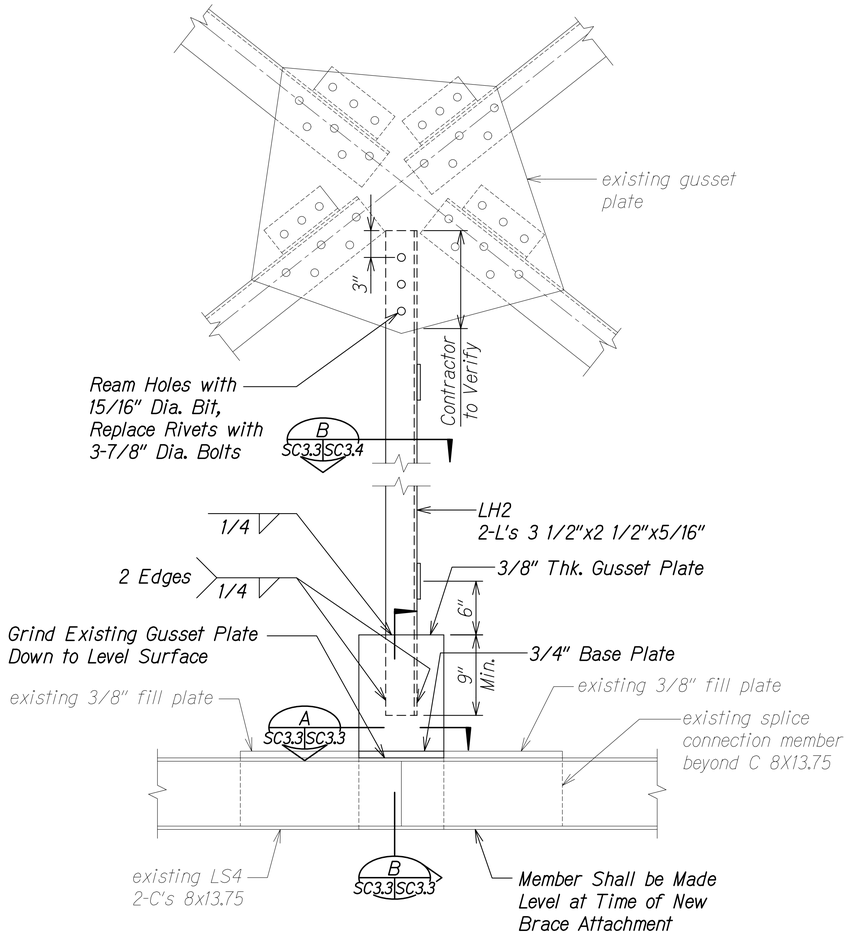

BENTS NOS. 4 AND 5 VERTICAL BRACE REPAIR DETAIL

Scale: 1 1/2" = 1'-0"

1 SC2.1 SC3.3

SC2.2

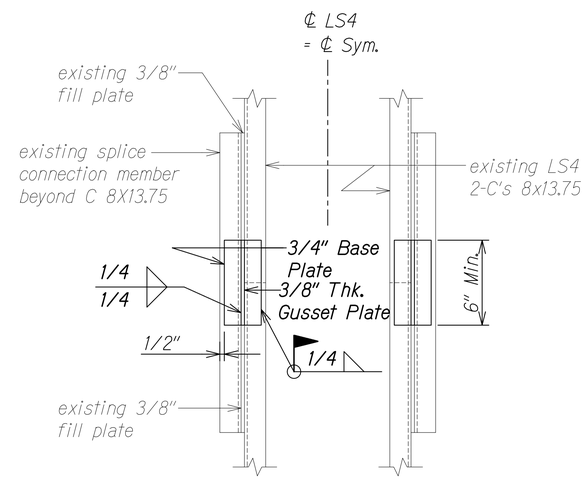

REPAIR PLAN

Scale: 1 1/2" = 1'-0"

A SC3.3 SC3.3

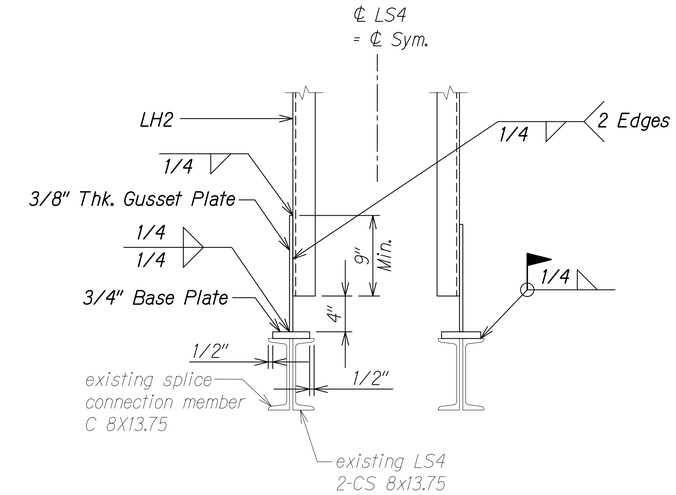

REPAIR SECTION

Scale: 1 1/2" = 1'-0"

B SC3.3 SC3.3

Notes:

1. Contractor to verify dimensions. See Structural General Notes Sheet SC0.1, Note 4.D.
2. Contractor to install all necessary temporary bracing prior to removal of existing members. See Structural General Notes, sheet SC0.1, Note 4.C.
3. Clean and prepare existing gusset plate and existing LS4 member for paint. Follow paint manufacturer's requirements for surface preparation. Field paint upper gusset plate prior to installation of new LH2 member.
4. Fabricate new gusset plate, vertical LH2, and base plate. Contractor to determine new member lengths. Shop paint new members before delivery to the field. Hold paint 6" back from weld splice locations.
5. Grind deteriorated existing gusset plate member down to level surface on top of existing LS4 member prior to installing new member.
6. Field apply specified paint system to all unpainted and clean surfaces of brace, gusset plate members, and bolt head and nut.

STEPHEN T. PETERS LICENSED PROFESSIONAL ENGINEER NO. 17097-S HAWAII, U.S.A.

THIS WORK WAS PREPARED BY ME OR UNDER MY SUPERVISION.

SIGNATURE EXPIRATION DATE OF THE LICENSE

STATE OF HAWAI'I
DEPARTMENT OF TRANSPORTATION
HIGHWAYS DIVISION

NANUE STREAM BRIDGE
SECTIONS AND DETAILS

HAWAII BELT ROAD
HAMAKUA COAST BRIDGE REPAIRS
(WAILUKU, HAKALAU AND NANUE STREAM BRIDGES)

Project No. 19HK-01-22M

Scale: As Noted Date: Sept. 2021

SHEET No. SC3.3 OF 4 SHEETS

ORIGINAL PLAN | SURVEY PLOTTED BY | DRAWN BY | TRACED BY | DESIGNED BY | QUANTITIES BY | CHECKED BY | DATE | NOTE BOOK No.

BRAWING NAME: Z:\OD ONGOING\20-040B-CRITICAL RPR WAILUKU-HAKALAU-NANUE\01 CADD\09-27-21 COMBINED\HCR-SSC3301 NAN SECT.DWG PLOT TIME: 09-27-21, 1:06 PM)

FED. ROAD DIST. NO.	STATE	PROJ. NO.	FISCAL YEAR	SHEET NO.	TOTAL SHEETS
HAWAII	HAW.	19HK-01-22M	2022	27	27

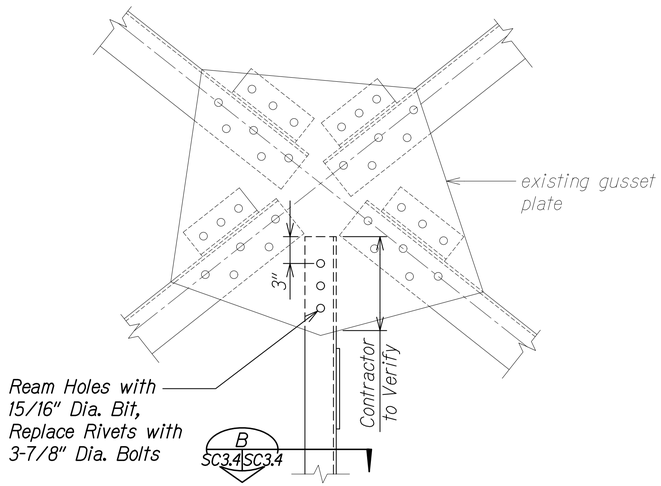

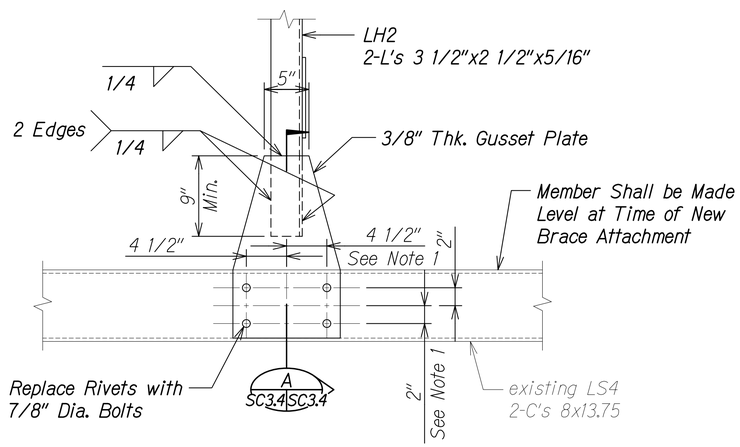

BENTS NOS. 6 AND 7 VERTICAL BRACE REPAIR DETAIL

Scale: 1 1/2" = 1'-0"

1
SC2.1 SC3.4

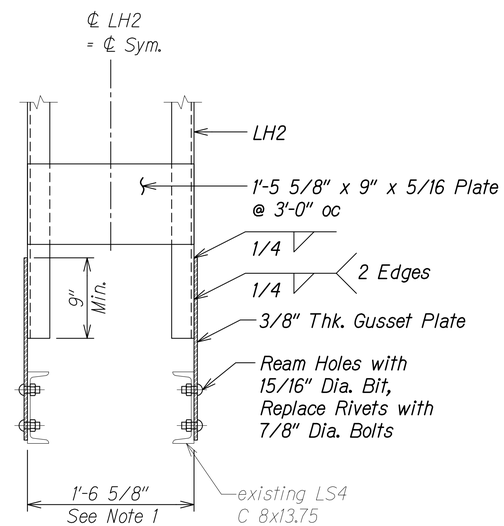

REPAIR SECTION

Scale: 1 1/2" = 1'-0"

A
SC3.4 SC3.4

Notes:

1. Contractor to verify dimensions. See Structural General Notes, Sheet SC0.1, Note 4.D.
2. Contractor to install all necessary temporary bracing prior to removal of existing members. See Structural General Notes, sheet SC0.1, Note 4C.
3. Clean and prepare existing gusset plate and existing LS4 member for paint. Follow paint manufacturer's requirements for surface preparation. Field paint these members prior to installation of new LH2 member.
4. Fabricate new gusset plate and vertical LH2. Contractor to determine new member lengths. Shop paint new members before delivery to the field.
5. Field apply specified paint system to all unpainted and clean surfaces of brace, gusset plate members, and bolt head and nut.

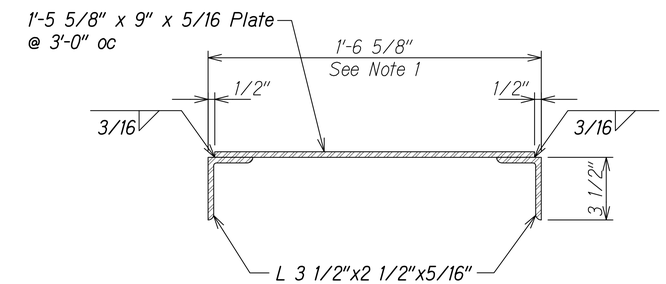

LH2 SECTION

Scale: 3" = 1'-0"

B
SC3.3 SC3.4
SC3.4

STEPHEN T. PETERS
LICENSED PROFESSIONAL ENGINEER
NO. 17097-S
HAWAII, U.S.A.

THIS WORK WAS PREPARED BY ME OR UNDER MY SUPERVISION.

SIGNATURE — EXPIRATION DATE OF THE LICENSE

STATE OF HAWAI'I
DEPARTMENT OF TRANSPORTATION
HIGHWAYS DIVISION

NANUE STREAM BRIDGE
SECTIONS AND DETAILS

HAWAII BELT ROAD
HAMAKUA COAST BRIDGE REPAIRS
(WAILUKU, HAKALAU AND NANUE STREAM BRIDGES)
Project No. 19HK-01-22M

Scale: As Noted — Date: Sept. 2021

SHEET No. SC3.4 OF 4 SHEETS

ORIGINAL PLAN | NOTE BOOK No. | SURVEY PLOTTED BY | DRAWN BY | TRACED BY | DESIGNED BY | QUANTITIES BY | CHECKED BY | DATE

DRAWING NAME: Z:\OD DNGDNG\20-040.8-CRITICAL REPR WAILUKU-HAKALAU-NANUE\01 CAD\09-27-21 COMBINED\HCR-SCS0301 NAN SECT.DWG PLOT TIME: 09-27-21, 1:08 PM